MEMORANDUM FOR: SAF/PAS
1690 Air Force Pentagon - 5D227
Washington DC 20330-1690

MAY 30 2002

FROM: Francis G. Hinnant, Col, USAF
Associate Director of Acquisition
NPOESS Integrated Program Office
8455 Colesville Rd, Suite 1450
Silver Spring, MD 20910

SUBJECT: Paper approval for: Visible Infrared Imaging Radiometer Suite (VIIRS) Rotating Telescope All Reflecting System

Enclosed are the required ten (10) copies of the subject papers. This paper will be released at the IGARSS02 conference on June 25, 2002. It was written by, and will be presented by employees of Raytheon Electronic Systems.

The program office has reviewed the information in the attached papers and found it appropriate for public disclosure without change.

Point of contact on this matter is Capt. Ken Speidel, NPOESS IPO/ADA at 301-427-2084 (Ext. 208).

Attachment: Presentation—10 copies

Raytheon

Visible Infrared Imaging Radiometer Suite (VIIRS) Rotating Telescope All Reflecting System

June 25, 2002

Craig Kent, Don Pies, Geoff Walter

Copyright © 2002 Raytheon Company
An unpublished work. All rights reserved.

Raytheon

NPOESS

Trades Resulted in Best Value Single Sensor Configuration

- All Orbit Operational Flexibility
- Terminator Orbit Sun-Glare Mitigation without Spacecraft Glare Obstructor
- Significantly Better-than-Threshold Imagery, SST, and many other EDRs

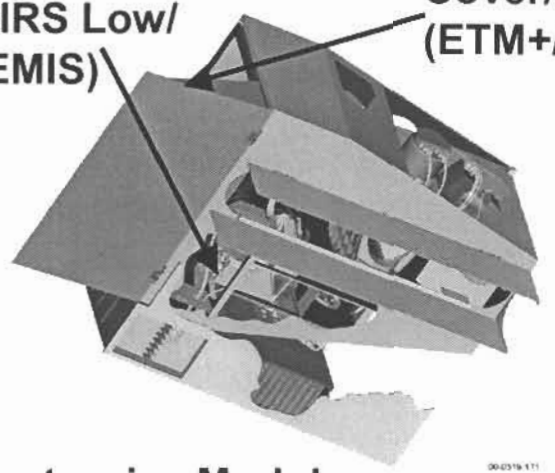

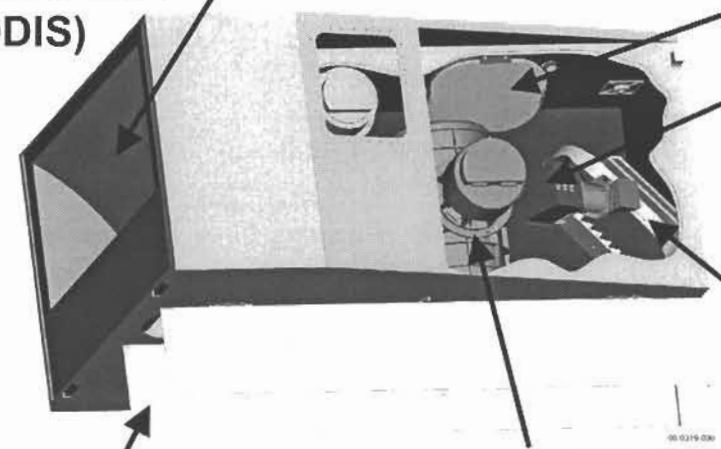

- Constant-Speed Rotating Telescope
- Simple All-Reflective Diamond Point Turned Bolt-together Optics
- Proven Emissive/Reflective Calibration

Copyright © 2002 Raytheon Company
An unpublished work. All rights reserved.

Raytheon

NPOESS

Key Requirements and Cost Determined Primary Sensor Architecture Features

Driving Attribute(s)	Impacted Parameters & Values
30 EDRs Covering Wide Range Of Phenomena	22 Bands, 20 Spectral Values 0.4-12 microns, 2 Nesting GSI Values
0.4 micron <wavelength < 13 microns	Reflective optical system
Band-Band Registration preserving full performance capability of algorithms	Band-Band Misregistration < 20%, Implies Single Sensor, Strongly favors reflective optics
Signal-to-Noise Ratio, Optics Cost, Focal Plane Cost	19 cm telescope aperture, 16 detectors in track
Wide swath, Wide dynamic range	Well-baffled Rotating Telescope Serving All Bands Including Day/Night Band
Economical performance to 13 microns	Photovoltaic HgCdTe Array Detectors & Readout IC
Radiometric Uncertainty 2% Vis, 0.4% - 7% IR	On-board calibration using blackbody, solar diffuser with stability moniter, space view with lunar calibration opportunities
Polarization Uncertainty 2% Vis, 0.4% - 7%	

Copyright © 2002 Raytheon Company
An unpublished work. All rights reserved.

Raytheon

NPOESS

3 Focal Planes (4 FPAs) Cover VIIRS Spectrum

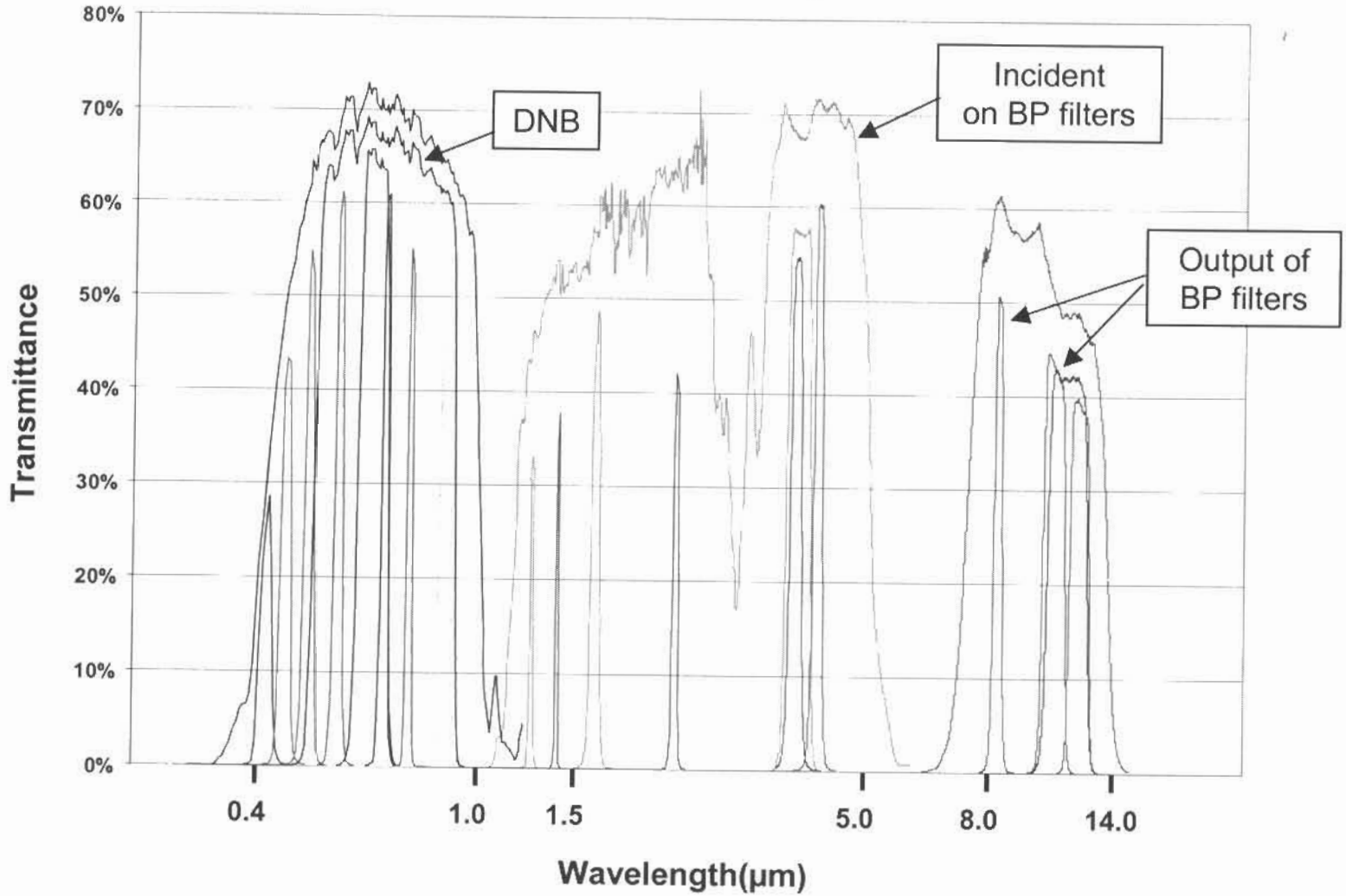

Y0011672 - chart 4

Copyright © 2002 Raytheon Company
An unpublished work. All rights reserved.

Raytheon

NPOESS

Three Co-Registered FPAs With 0.8 Deg. x 0.8 Deg. Field Drives Optical Design

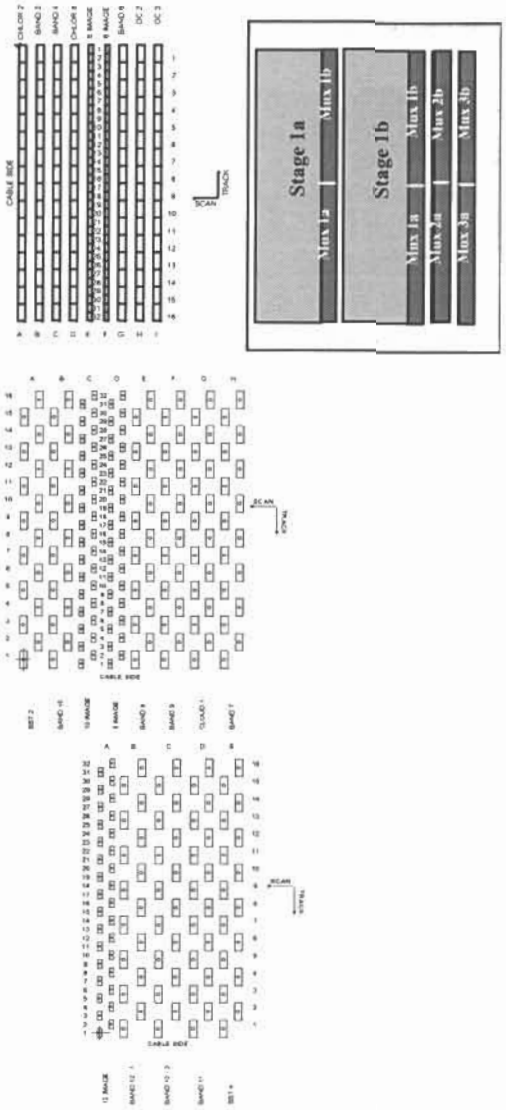

- VisNIR PIN diode array/ROIC hybrid colocated with Day/Night Band monolithic CCD
- S/MWIR & LWIR FPAs: Photovoltaic HgCdTe
  - Integrated "Microlens" arrays reduce background noise
- All FPA performance parameters meet Threshold requirements & approach Objectives
- Optical alignment of all FPAs provides optimum band-band registration

Copyright © 2002 Raytheon Company
An unpublished work. All rights reserved.

Raytheon

NPOESS

Solar Impingement in Terminator Orbit Influenced Sensor Design

- Scan cavity tips toward Sun (up to 27 degrees)
- Results in small angle between scan limit and solar vector (≈ 7 degrees)
- Wide variation in Beta angle does not allow single sunshade design

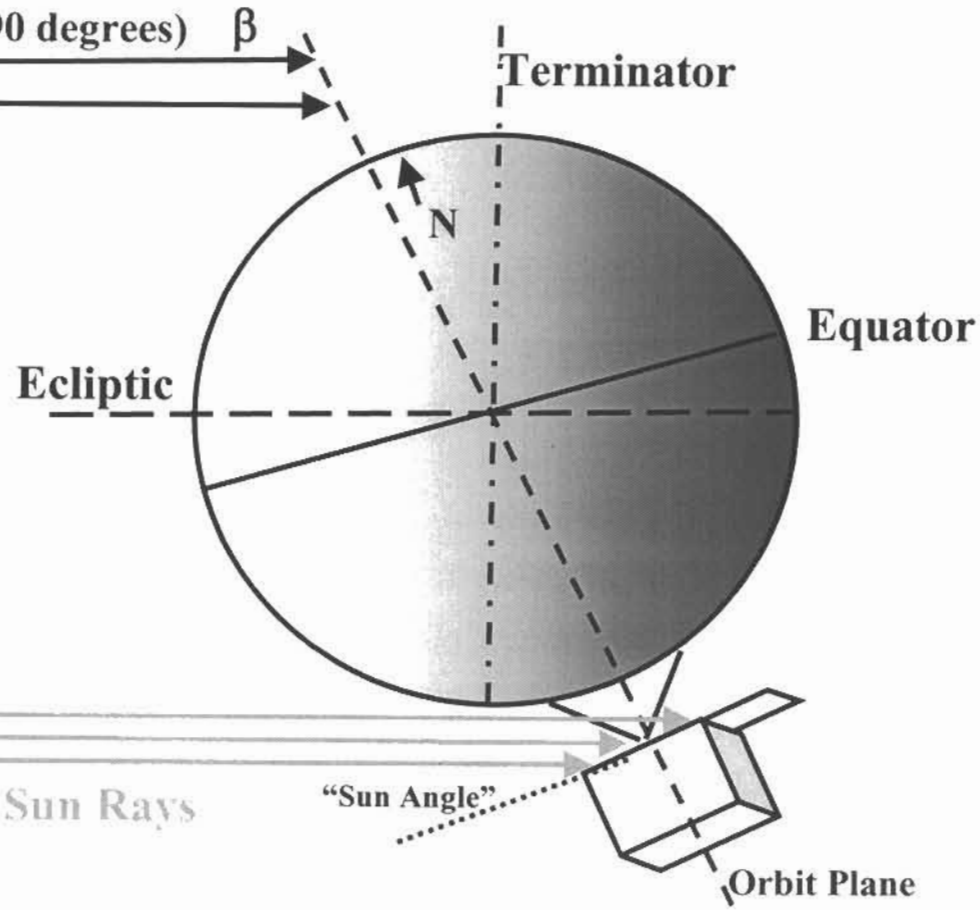

Copyright © 2002 Raytheon Company
An unpublished work. All rights reserved.

Raytheon

NPOESS

Rotating Telescope Provides Solar Impingement Rejection in Terminator

A Scan-Mirror Design Requires Spacecraft Mounted Glare Shield

Rotating Telescope Has Minimum Sensitivity to Sun Impingement

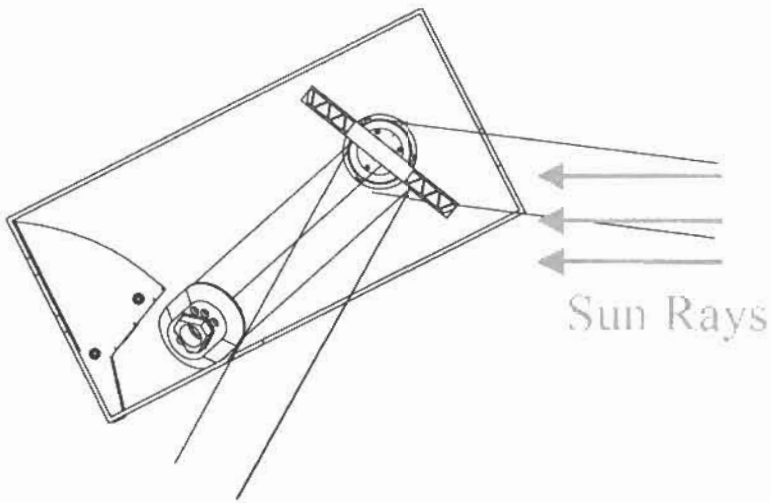

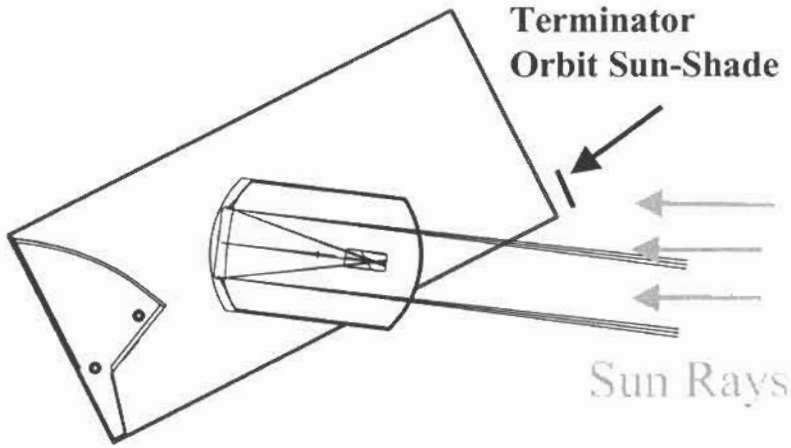

Nadir

Worst-case Terminator Orbit Sun Impingement

Rotating telescope enabled sensor suite fusion

Copyright © 2002 Raytheon Company
An unpublished work. All rights reserved.

Raytheon

NPOESS

Optics Trades Resulted in Low Cost, Low Risk Design

- State-of-practice post polished, diamond point turned (DPT) technology enabled consideration of Day/Night Band integration into main scanner
  - Demonstrated low scatter performance on Raytheon programs
- Bolt together optics for telescope and aft imagers makes three mirror and four mirror forms affordable
  - Dramatically reduces time required for alignment
  - Provides high fidelity performance over the large optical extent required for adjacent Vis/NIR and DNB focal planes

Copyright © 2002 Raytheon Company
An unpublished work. All rights reserved.

Raytheon

NPOESS

Post-polished Telescope Provides Required Low Light Level Scatter Performance

Performance Comparison: Scene to Scatter Ratios for standard versus post-polished telescope(s)

Low Light Level Sensor Type	Affordable Diamond Point Turned (DPA) Optical Finish	Integrated Scene to Scatter Ratio Min.	Max.
Mulitple telescope (8)	Standard	13	27
Integrated in Main Scanner	Post-polished	125	150

Integrated Scene-to-Scatter ratio over entire low-light range
(7E-4 to 4E-9 watt/cm^2 sr)
EOL prediction based on CL-450 cleanliness level

Single post-polished telescope provides affordable performance

Copyright © 2002 Raytheon Company
An unpublished work. All rights reserved.

Raytheon

NPOESS

Single Sensor VIIRS Improves Data Quality Reduces Integration Costs

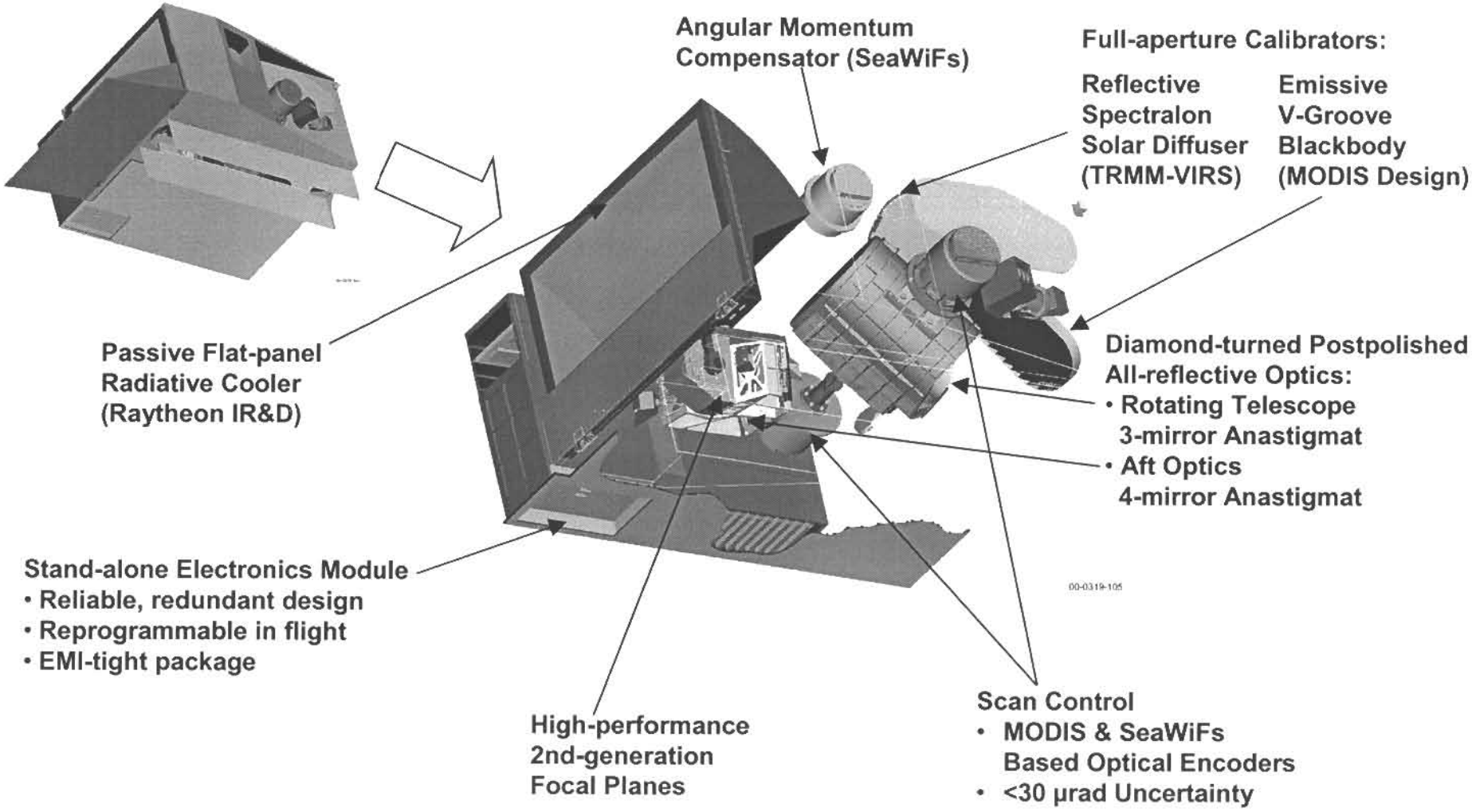

Copyright © 2002 Raytheon Company
An unpublished work. All rights reserved

Raytheon

NPOESS

All-Reflective Optical System: Low Distortion, Low Stray Light Susceptability

- Well-Baffled Rotating 3-Mirror Afocal Anastigmat Telescope (TMA)
  - Outstanding sharpness & very low scatter
  - Derived from Raytheon military optical systems
- Half-Angle Mirror Relay to Stationary Optics
- Separate 4-Mirror Anastigmat Aft Imager
- 2 Dichroic Beamsplitters define spectra for 3 Focal Planes
- Economical diamond-turned, postpolished bolt-together telescopes

Copyright © 2002 Raytheon Company
An unpublished work. All rights reserved.

Raytheon

NPOESS

VIIRS Phase II Optical Design Optimized for Enhanced Performance

Optical System
Updated focal length
Updated FOV (FPA extents)

Status
Design complete
Toleranced for manufacturability

Rotating Telescope
Reduced distortion
Reduced wavefront error
Improved packaging

Aft Optics Imager
Reduced distortion
More uniform wavefront error
Reduced pupil aberrations
Improved packaging
Increased back focal length

Half-Angle Mirror
Reduced angles of incidence
Optimized pupil location for
Minimum HAM size and
Greater clearances at EOS

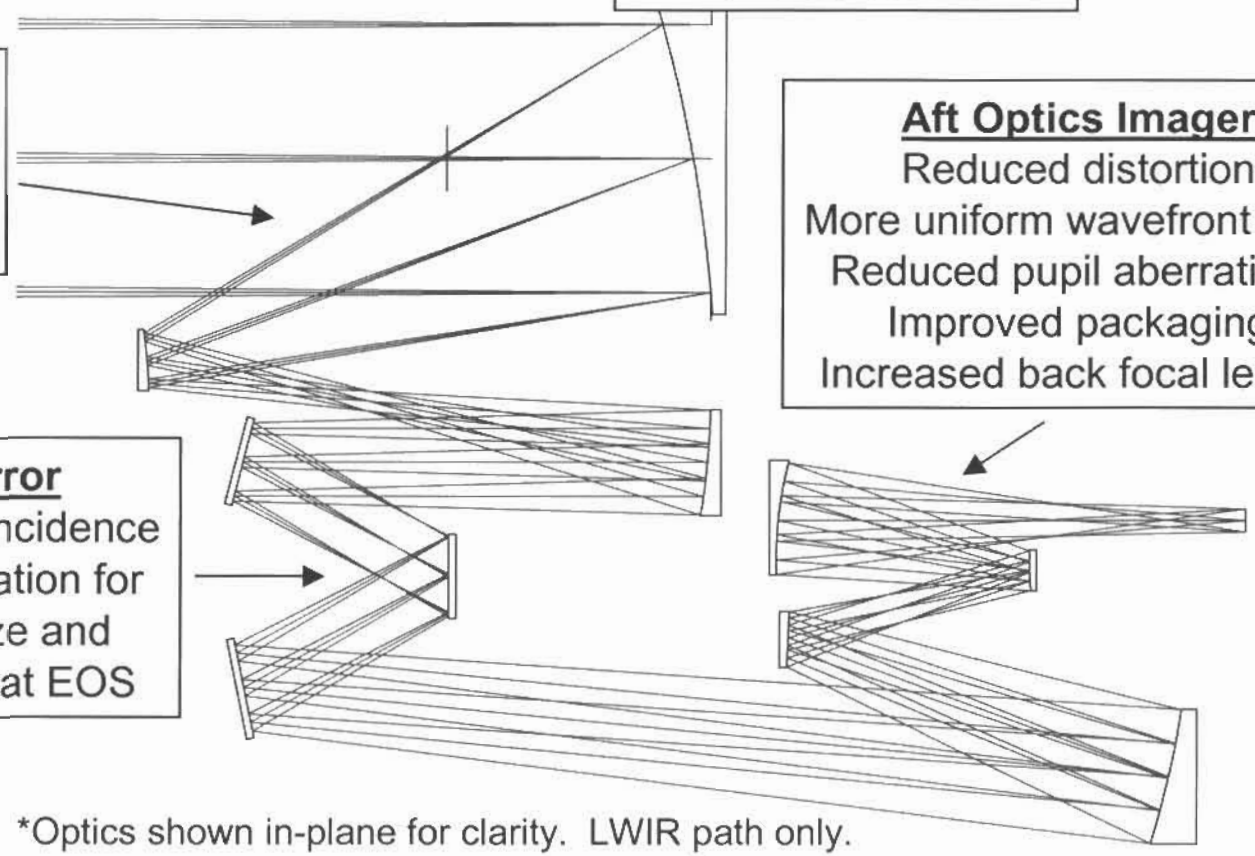

*Optics shown in-plane for clarity. LWIR path only.

Copyright © 2002 Raytheon Company
An unpublished work. All rights reserved.

Raytheon

NPOESS

RTA is a High Performance, Afocal TMA and Fold Mirror

- Off-axis, 4X afocal TMA telescope
  - EPD = 190.5 mm
  - FOV = 1.235° (scan) x 0.817° (track)
- All conic design (no general aspheres)
- Ease of fabrication, alignment and test at both component and subsystem level
- IIP allows field stop for solar/stray light rejection
- Telescope exit pupil located near HAM to minimize footprint
- Constant rate rotating telescope assembly
- Fold mirror #1 rotates with TMA telescope assembly

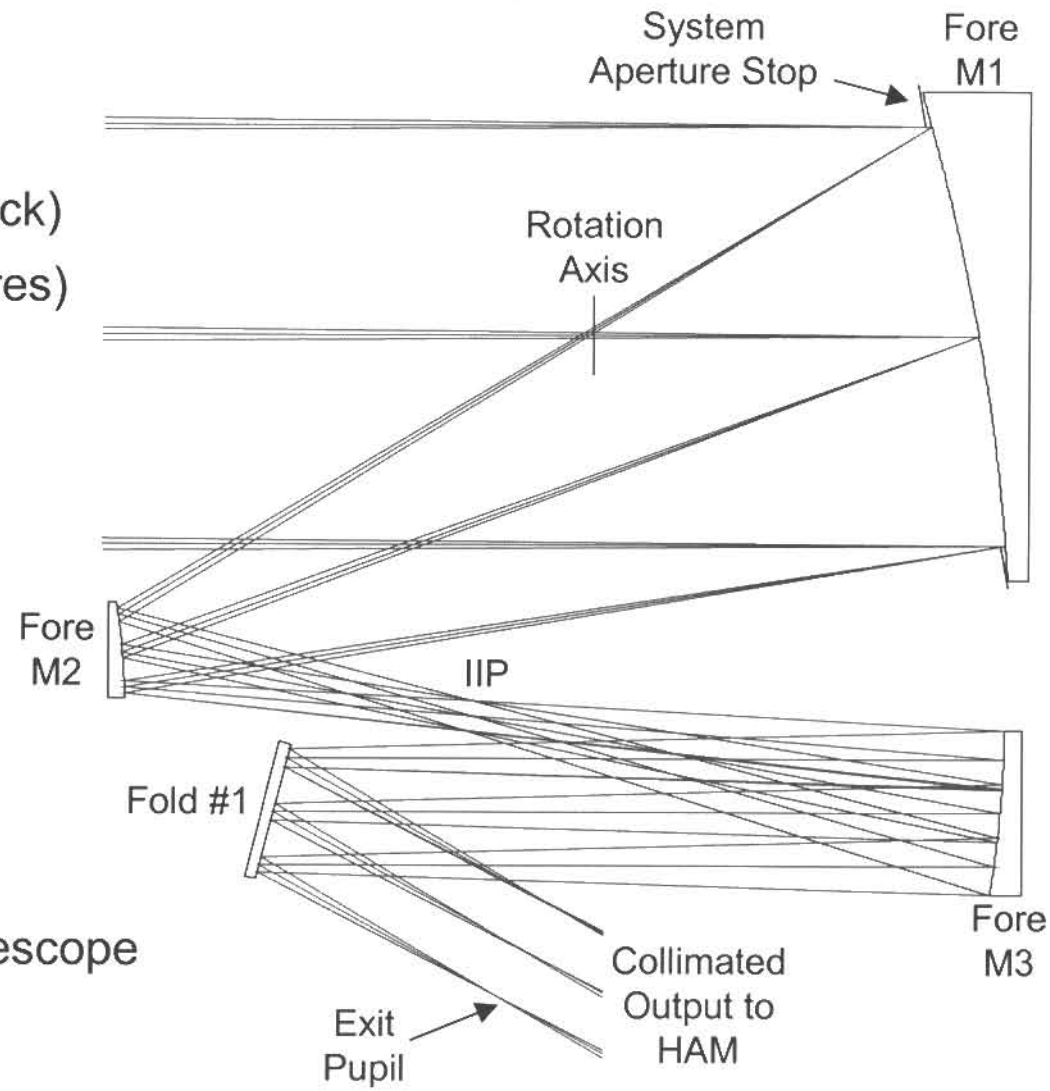

Copyright © 2002 Raytheon Company
An unpublished work. All rights reserved.

Raytheon

Optical Sub-Assemblies within the Optical Mechanical Module

NPOESS

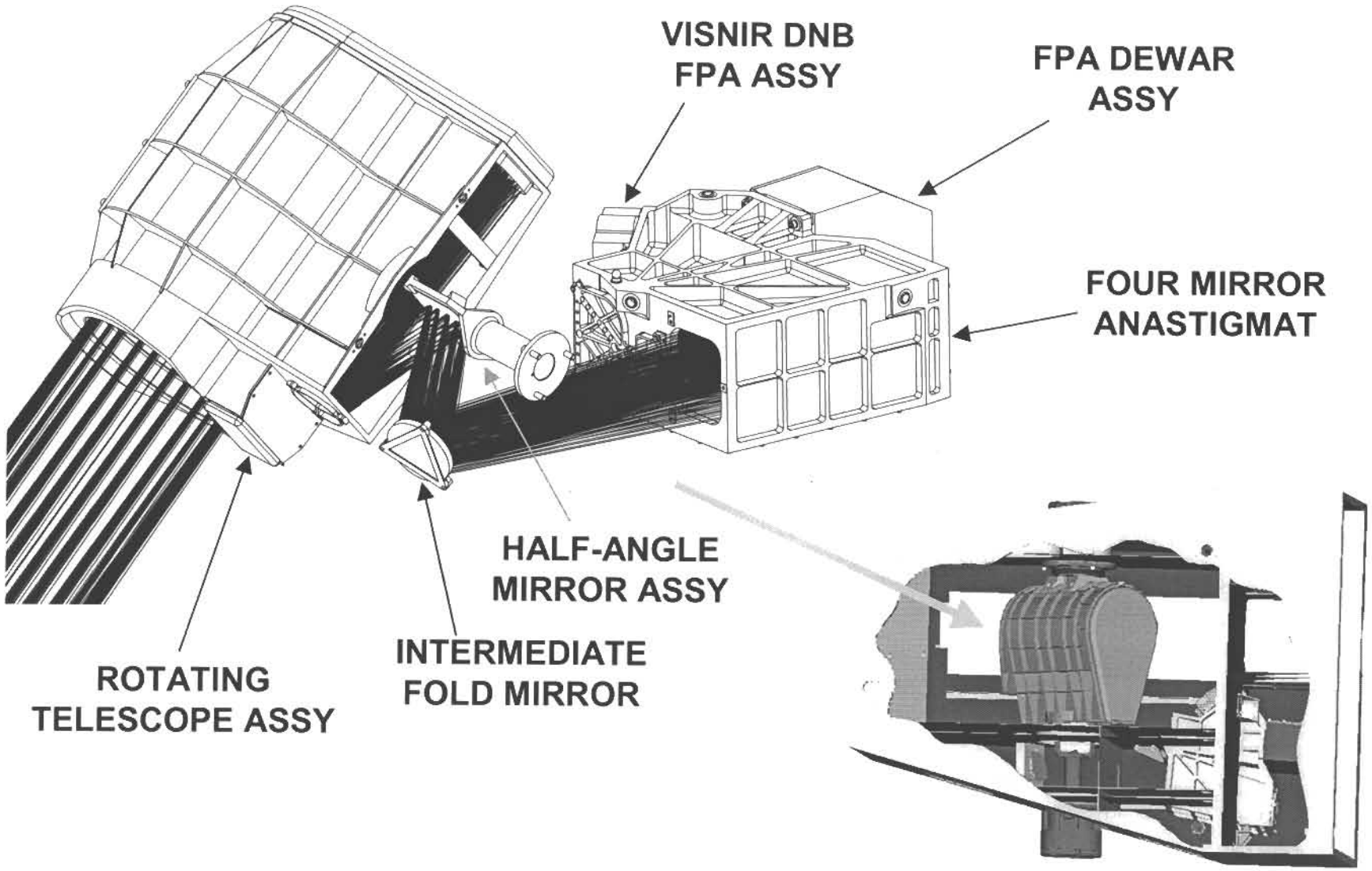

Copyright © 2002 Raytheon Company
An unpublished work. All rights reserved.

Raytheon

NPOESS

Half-Angle Mirror Facilitates Rotating Telescope Assembly with Fixed Aft Optics

- Constant rate, double-sided HAM rotates at 1/2 speed of telescope assembly
- Effectively "derotates" input beam and directs scene energy into fixed aft optics
- HAM rotates about its centerline
- Telescope exit pupil located near HAM to minimize footprint

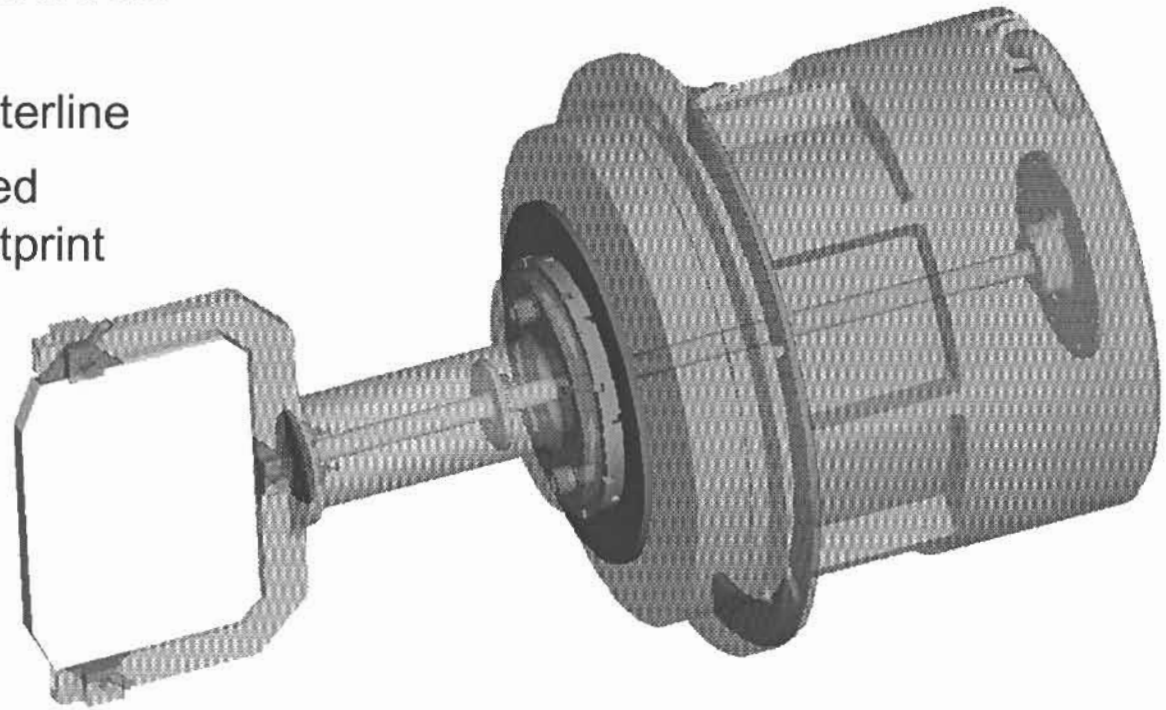

Copyright © 2002 Raytheon Company
An unpublished work. All rights reserved.

Raytheon

NPOESS

Aft Optics Assembly

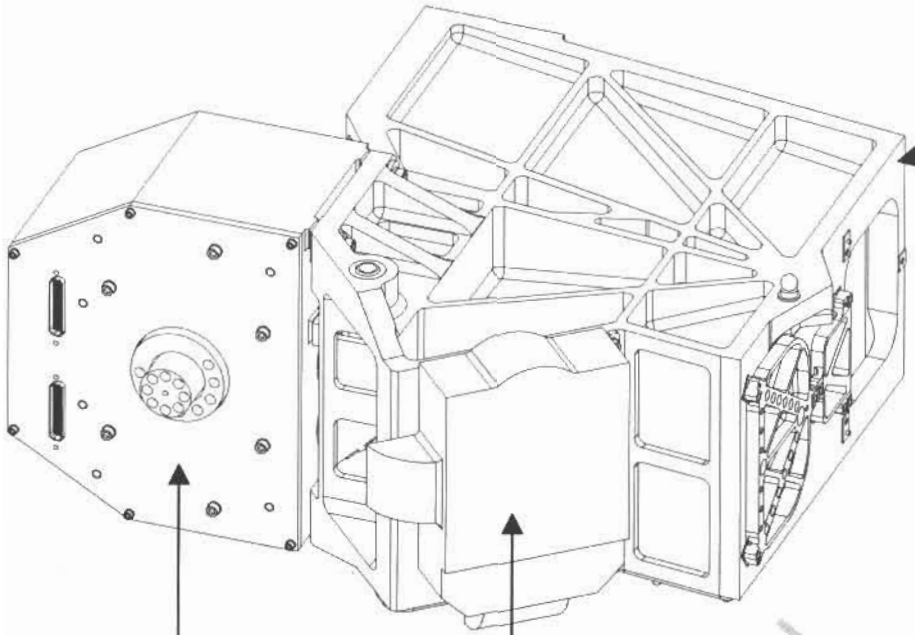

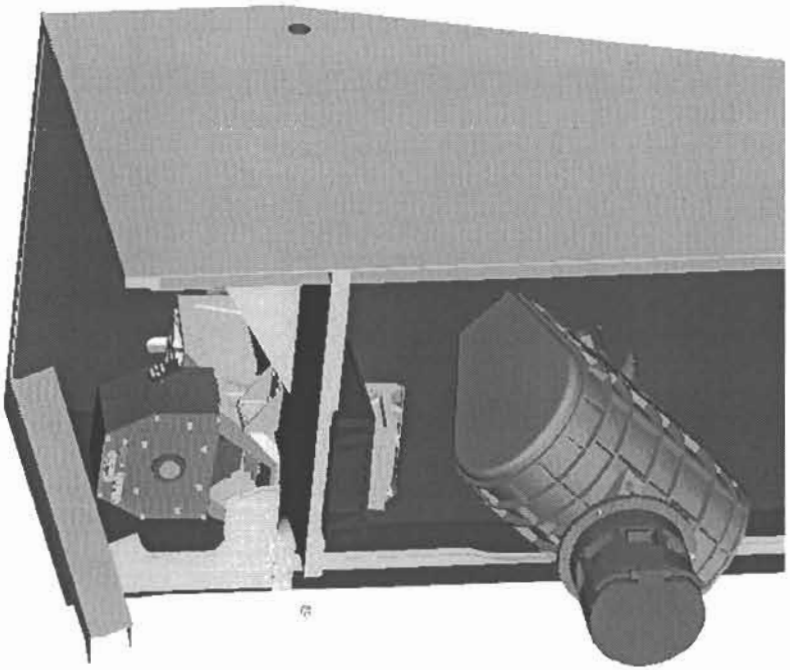

Copyright © 2002 Raytheon Company
An unpublished work. All rights reserved.

Raytheon

Aft Optics Components

NPOESS

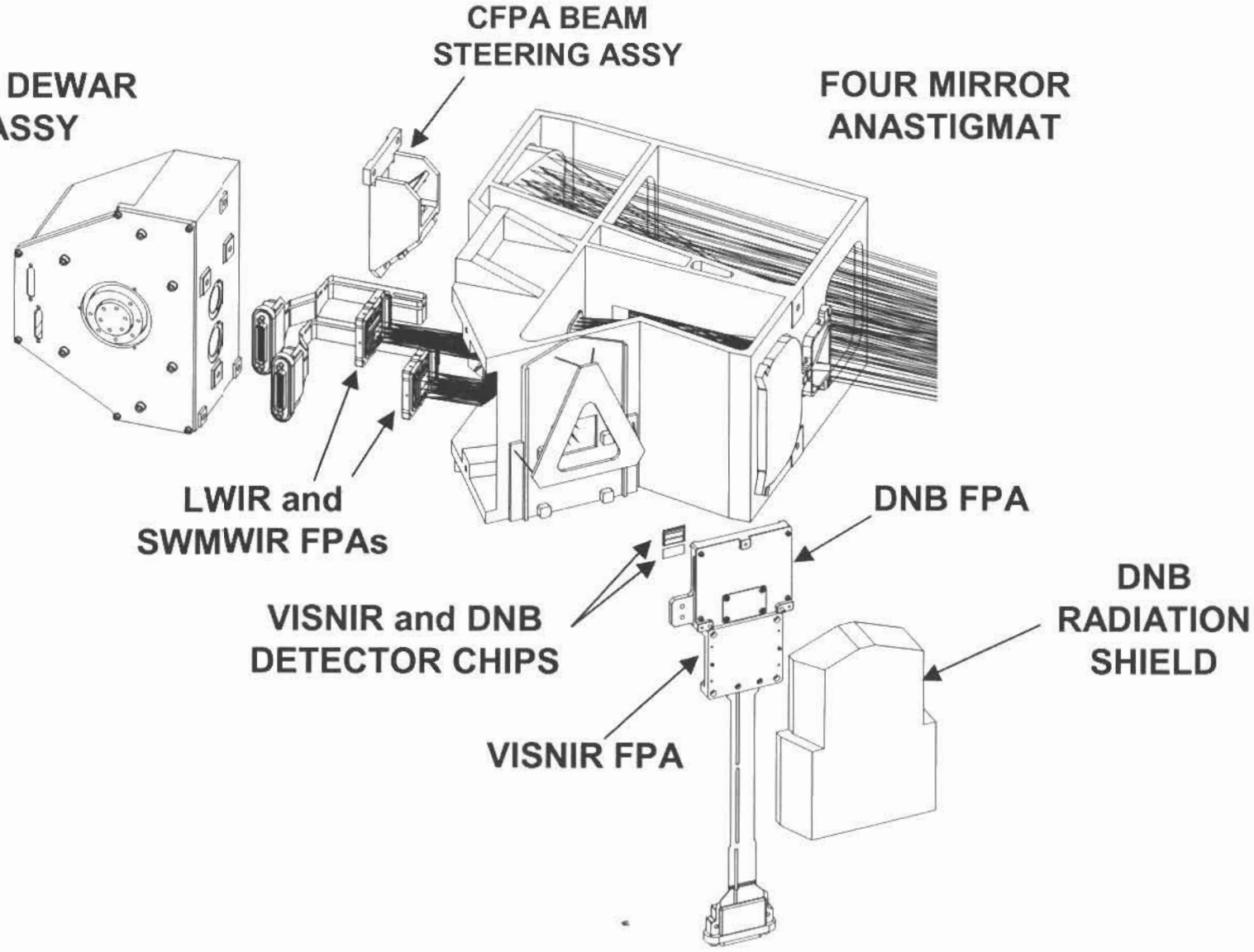

Copyright © 2002 Raytheon Company
An unpublished work. All rights reserved.

Raytheon

NPOESS

Aft Optics FMA Maintains High Performance Over Expanded FOV

- Compact, all reflective imager
  - EPD = 47.625 mm
  - FOV = 4.94° (scan) x 3.27° (track)
  - F/6 (EFL = 285.25 mm)
- Off-axis FMA requires general aspheres to achieve performance
- IIP allows field stop for solar/stray light rejection
- Accessible, real exit pupil relayed to IR detectors by microlens arrays (not shown)
- Image plane AOIs minimized (0-12°)

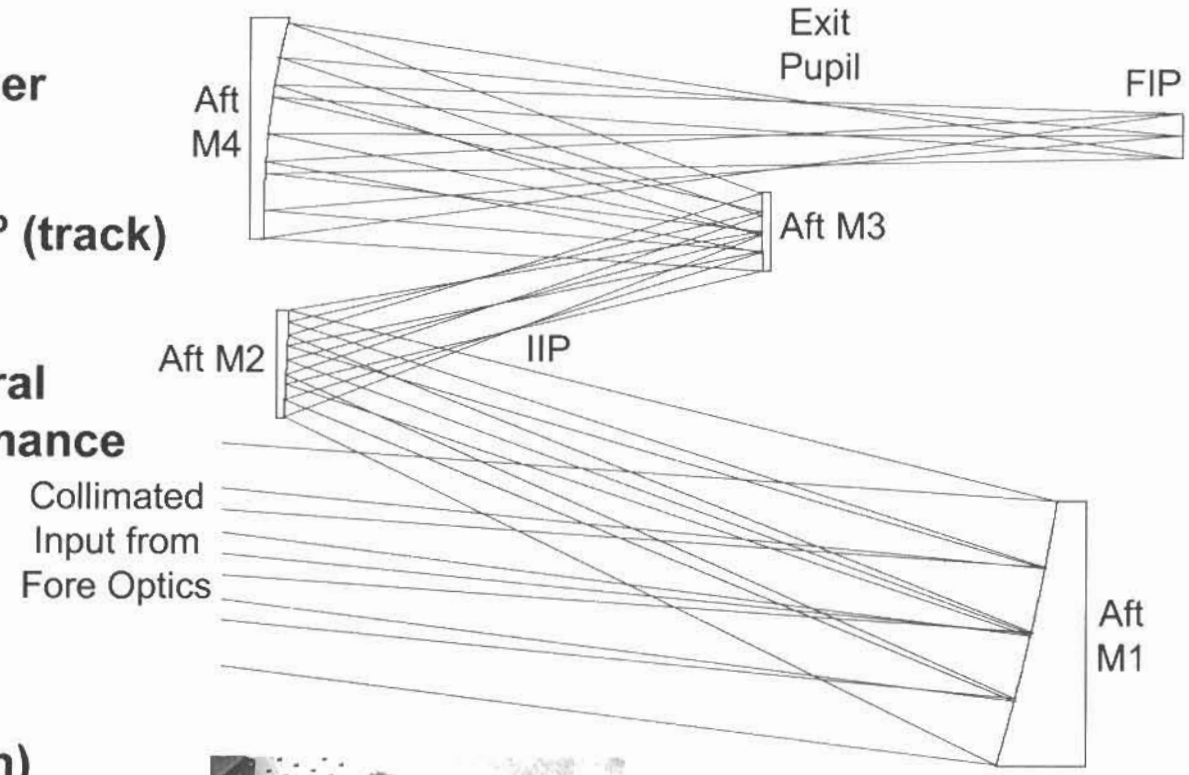

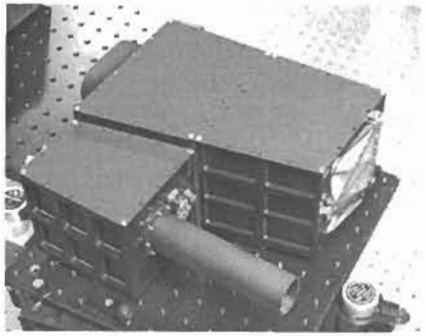

Copyright © 2002 Raytheon Company
An unpublished work. All rights reserved.

Raytheon

NPOESS

Back End Optics Provide Spectral Separation into Three FPA Channels

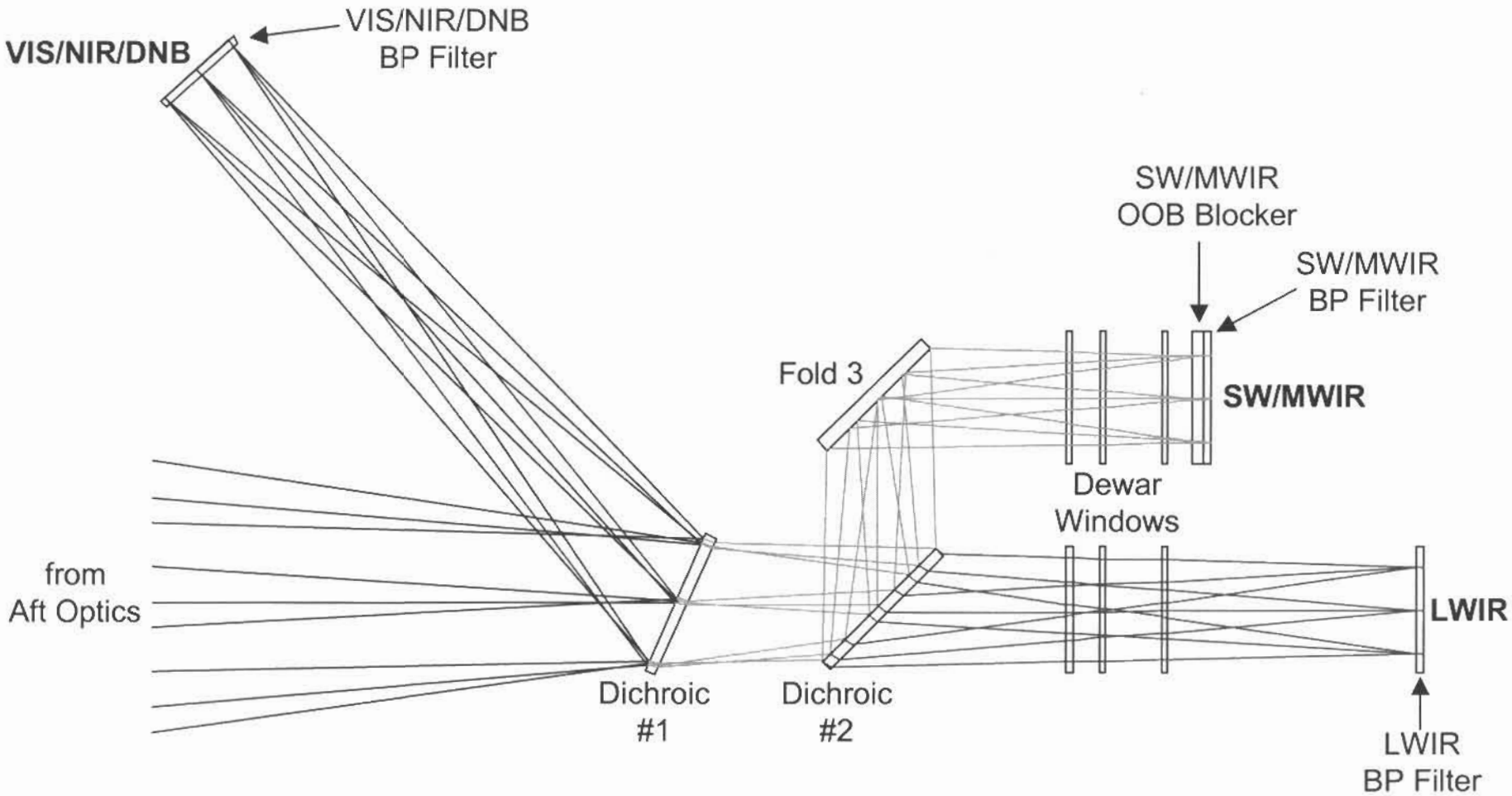

*Optics shown in-plane for clarity. Microlens arrays and detectors not included.

Copyright © 2002 Raytheon Company
An unpublished work. All rights reserved.

Raytheon

NPOESS

Microlens Array Optimizes Radiometric Performance

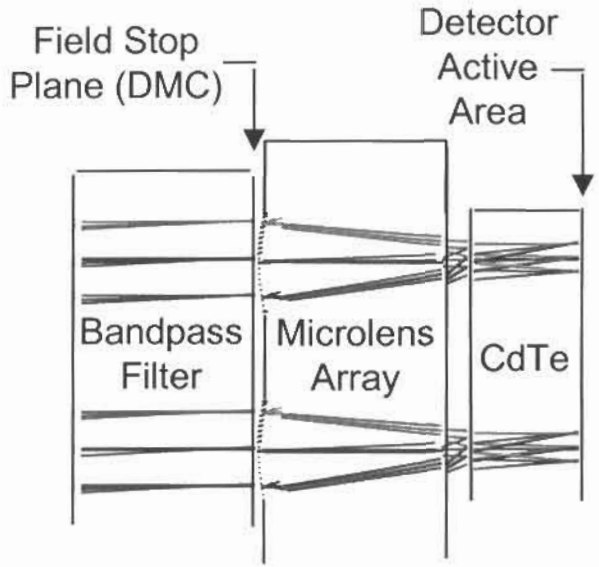

- Microlens array relays system entrance aperture onto detectors
- ~F/1.0 microlenses minimize detector area and reduce noise
- Convex-plano microlens design eases fabrication
- Monolithic microlens array simplifies dewar assembly and alignment
- 1 mm thick Si substrates for both SW\MWIR and LWIR channels
- Each microlens operates slightly off-axis to center pupil image on rectilinear detector grid
- Microlens design is complete
- First round 100 x 100 microlens array delivered and tested
- Second round arrays in fabrication

Copyright © 2002 Raytheon Company
An unpublished work. All rights reserved.

Raytheon

NPOESS

Optical Performance Requirements Allocated from Sensor Specification are Met

Level 3 Optical Performance Requirement	Paragraph	Allocation Value	Predicted Performance	Verification Method
Rotating Telescope	OPM0001	360 Deg. Rotation	Complies	I
# Spectral Regions (# FPs)	OPM0004	20 Bands, 3 Focal Planes	Complies	I
Spectral Bands	OPM0004	Table 1	PDR Spectral Band Chart	I
FOV	OPM0005	1.4 Deg scan x 0.8 Deg track	Complies	A
EFL	OPM0005	1141 mm	Complies	T, A
Field Stop Dimensions	OPM0005	Table 2	Complies	T
Energy on Detector	OPM0010	100%	PDR EOD Chart	A
Optical MTF	OPM0008	Table 3	PDR MTF Chart	T, A
Transmittance	OPM0009	Tables 4 & 5	PDR Transmittance Chart	T, A
Aperture Size	OPM0009	190.5 mm	Complies	I
HAM Reflectance vs Scan Angle	OPM0014	Table 7	Complies	T, A
Polarization	OPM0011	Table 6	PDR Polarization Chart	T, A
Signal to Scatter Ratio	OPM0012	≥ 10	PDR SSR Chart	T, A
Optical Crosstalk	OPM0015	Table 7	Complies	A
Ghosting	OPM0015	Table 7	Complies	A
Wavelength Stability	OPM0015	Table 7	Complies	T
Bandwidth Stability	OPM0015	Table 7	Complies	T
Calibration Views	OPM0002	BB, Space, Solar, Lunar	Complies	D
Distortion	OPM0025	< 1.0%	Complies	A
EFL Tolerance	OPM0025	±0.15%	Complies	T, A
Field Stop Location Tolerance	OPM0025	1.0%	Complies	T
Fits Within Package	OPM0046	129 cm x 65 cm x 138 cm	Complies	I
Design Life (yrs)	OPM0029	7 on-orbit, 8 storage	Complies	A

Copyright © 2002 Raytheon Company
An unpublished work. All rights reserved.

Raytheon

NPOESS

End-to-End Optical Design Satisfies MTF Allocation with Margin

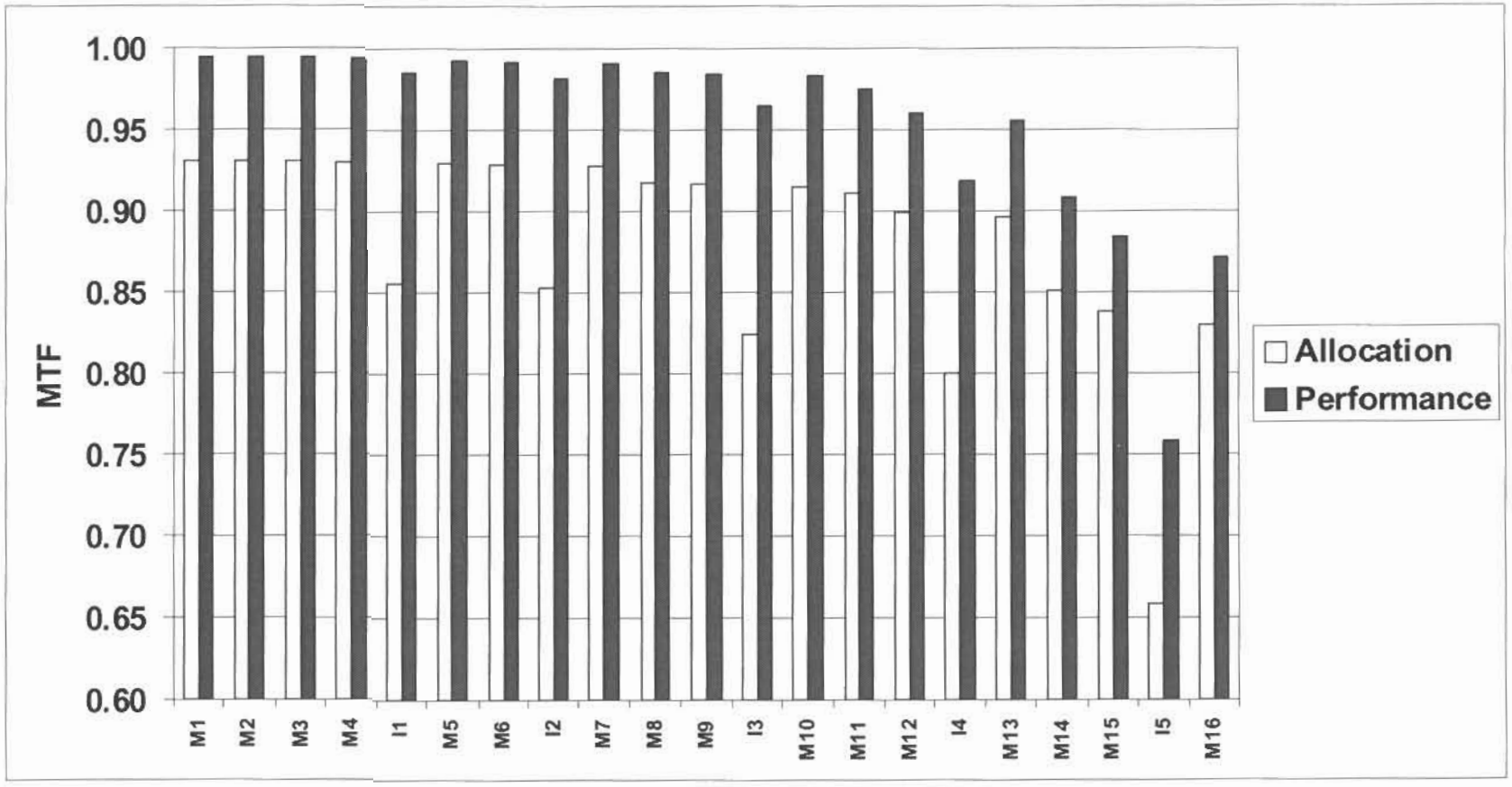

Spatial frequency = 1.4 cyc/mm for radiometric bands
Spatial frequency = 2.8 cyc/mm for imaging bands

Copyright © 2002 Raytheon Company
An unpublished work. All rights reserved.

Raytheon

NPOESS

Band-to-Band Registration Requirements Limit Optical Distortion

- Band-to-band registration (BBR) requirements flowed to sensor system based on EDR performance requirements
- Optical requirements derived from sensor level BBR requirements
  - relative distortion at field stop plane (< 25μm)
  - effective focal length (efl) tolerance (0.15%)
  - optical/mechanical assembly/alignment tolerances
- Individual band shifts (scan direction) minimize ±relative centroid offsets and improves overall distortion map (shifts applied to SW/MW/LWIR FPAs only)
- Worst case relative distortion is 15μm in scan and 16μm in track
  - any two detectors/field stops across any FPA
  - unique bandsets required for specific EDRs may exhibit better distortion performance
  - optical distortion is relatively stable with regard to manufacturing, assembly and alignment tolerances
  - detailed tolerancing analysis (in progress) will simulate as-built performance and confirm BBR requirements are satisfied

Copyright © 2002 Raytheon Company
An unpublished work. All rights reserved.

Raytheon

NPOESS

SW/MWIR Energy on Detector

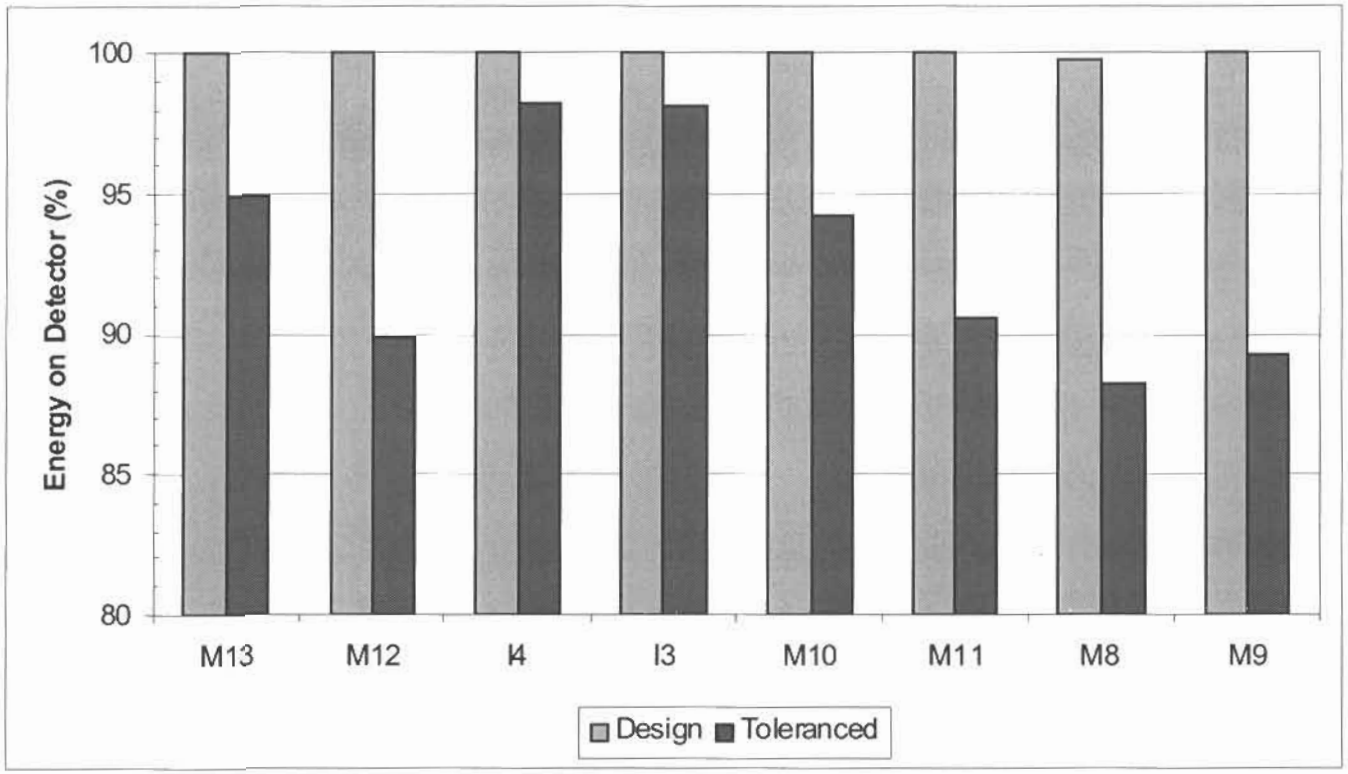

- Optical analysis supplies %EOD to systems engineering for use in the sensor SNR model
  - toleranced data includes radius errors and misalignments
  - Toleranced values represent optics allocation; EOD margin held at system level
- SW/MWIR analysis complete; LWIR in progress
- Investigating higher fidelity modeling techniques using ASAP (SBRS) and analytical phase modeling of near field diffraction (El Segundo)

Copyright © 2002 Raytheon Company
An unpublished work. All rights reserved.

Raytheon

NPOESS

End-to-End Optical Transmittance Satisfies Allocation in All Bands

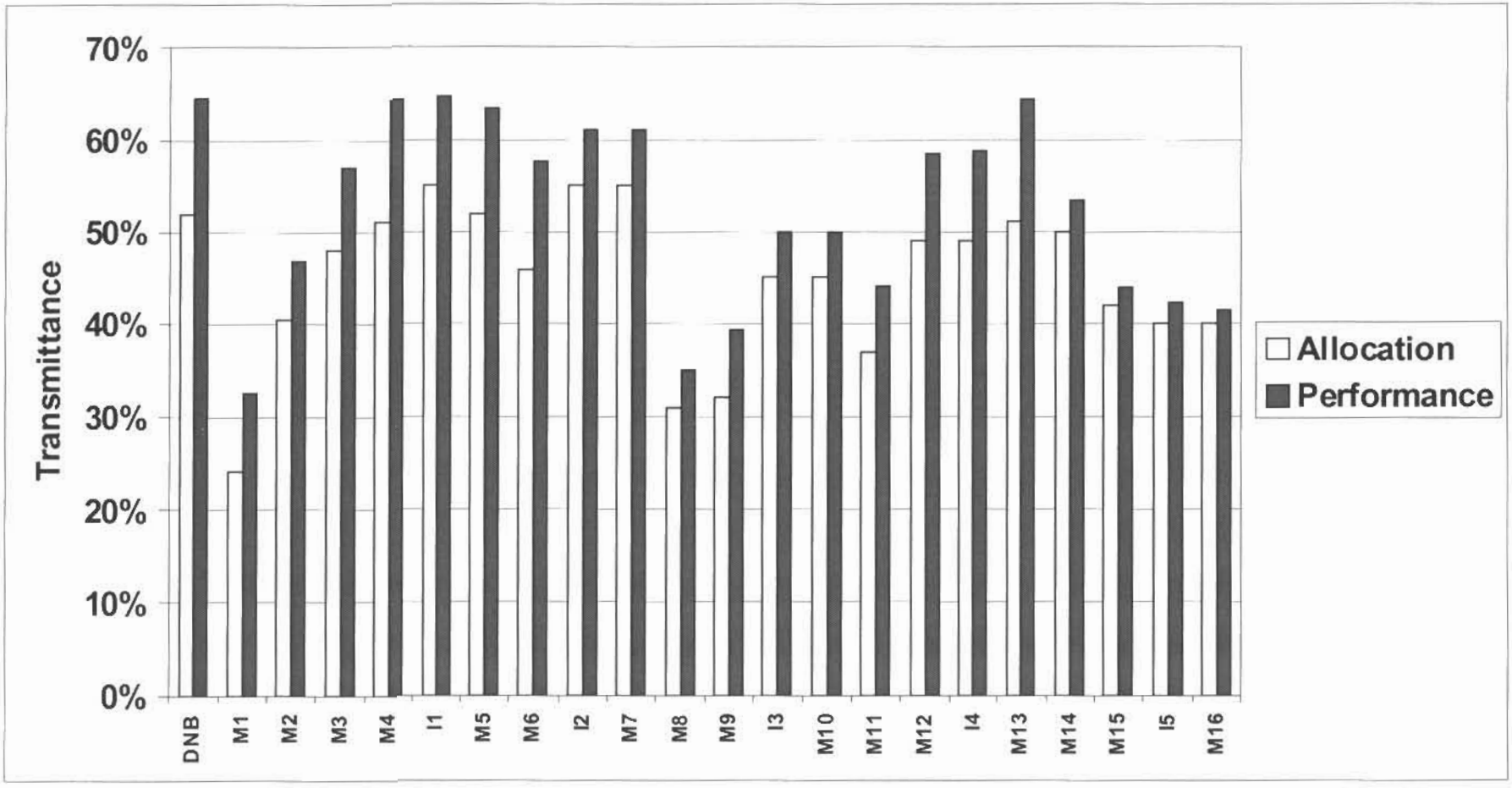

Y0011672 - chart 25

Copyright © 2002 Raytheon Company
An unpublished work. All rights reserved.

Raytheon

NPOESS

Phase II Design Satisfies Polarization Requirements

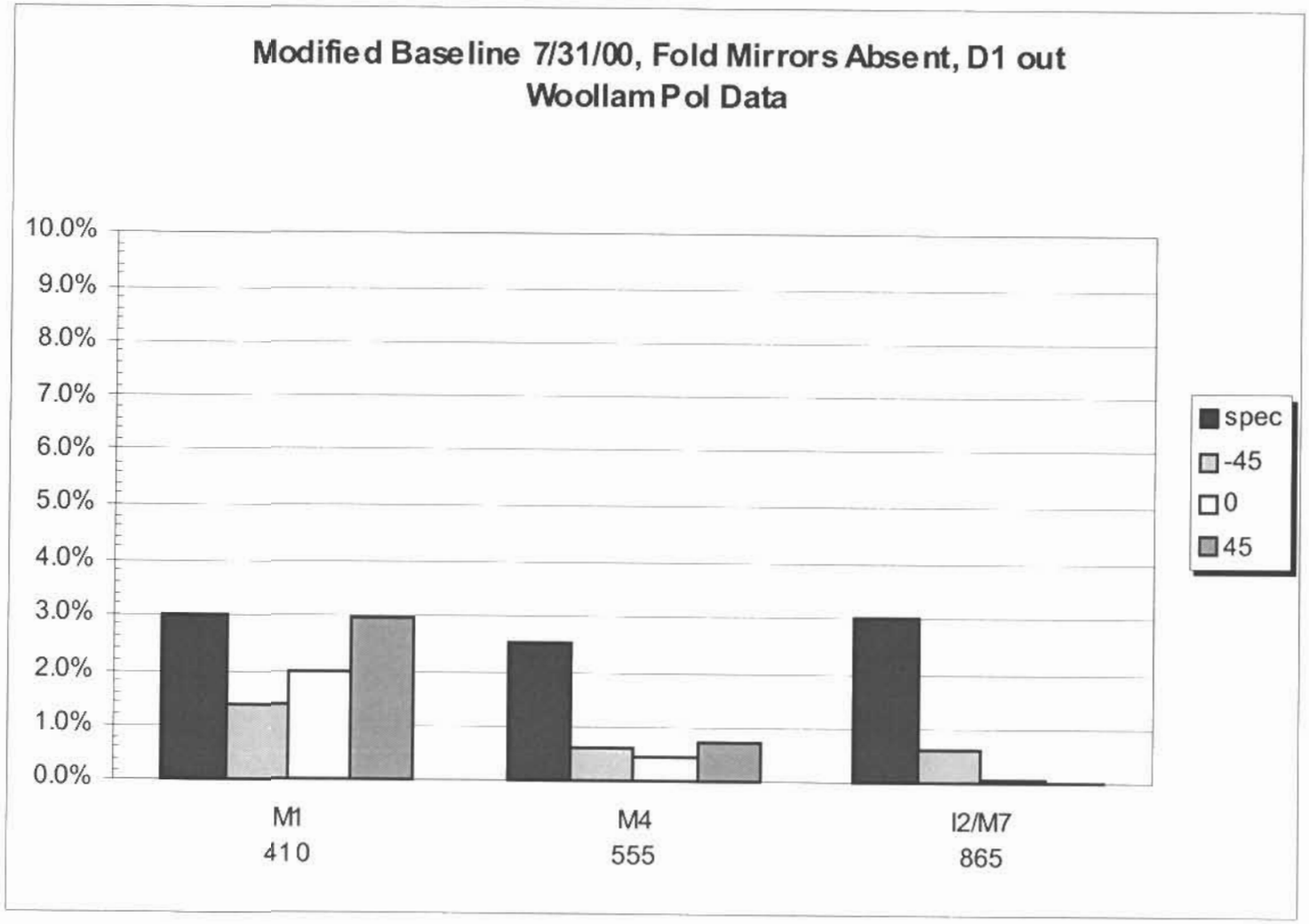

Y0011672 - chart 26

Copyright © 2002 Raytheon Company
An unpublished work. All rights reserved.

NPOESS

FOR OFFICIAL USE ONLY

AS AMENDED

Raytheon

DEPARTMENT OF THE AIR FORCE
SAF / PAS
CLEARED THIS INFORMATION

JUN 13 2002

AS AMENDED
FOR PUBLIC RELEASE

This is a
SAF/PAS document

02--0348

Call 697-3222/697-8932
for pickup or return to 5D227

Visible Infrared Imaging Radiometer Suite (VIIRS) Rotating Telescope All Reflecting System

June 25, 2002

Craig Kent, Don Pies, Geoff Walter

AS AMENDED

FOR OFFICIAL USE ONLY

This is contractor-generated competition sensitive information
Contact NPOESS/VIIRS Instrument Manager for distribution instructions

Copyright © 2002 Raytheon Company
An unpublished work. All rights reserved.

Trades Resulted in Best Value Single Sensor Configuration

- All Orbit Operational Flexibility
- Terminator Orbit Sun-Glare Mitigation without Spacecraft Glare Obstructor
- Significantly Better-than-Threshold Imagery, SST, and many other EDRs

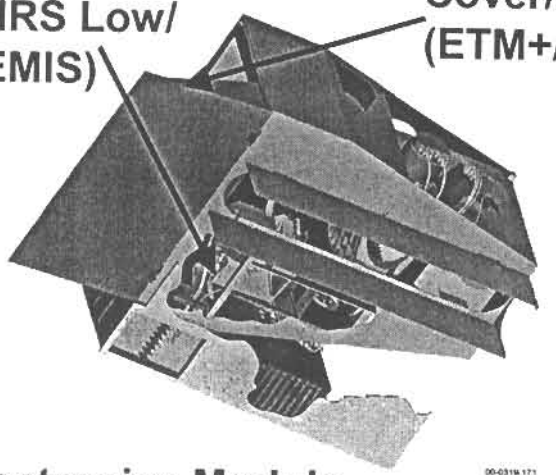

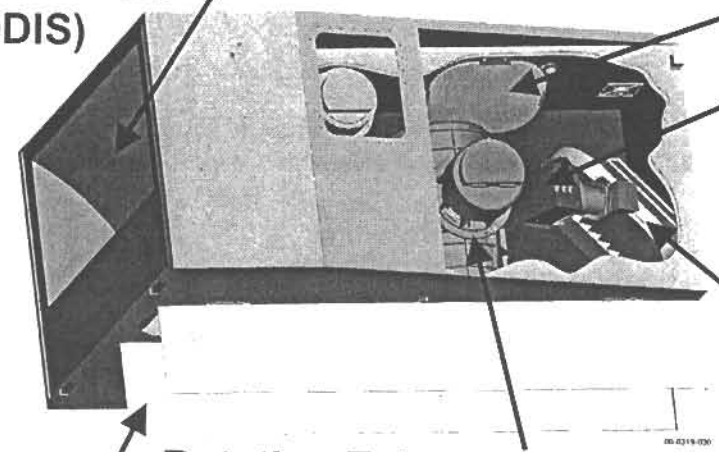

- Constant-Speed Rotating Telescope
- Simple All-Reflective Diamond Point Turned Bolt-together Optics
- Proven Emissive/Reflective Calibration

Copyright © 2002 Raytheon Company
An unpublished work. All rights reserved.

Raytheon

NPOESS

Key Requirements and Cost Determined Primary Sensor Architecture Features

Driving Attribute(s)	Impacted Parameters & Values
30 EDRs Covering Wide Range Of Phenomena	22 Bands, 20 Spectral Values 0.4-12 microns, 2 Nesting GSI Values
0.4 micron <wavelength < 13 microns	Reflective optical system
Band-Band Registration preserving full performance capability of algorithms	Band-Band Misregistration < 20%, Implies Single Sensor, Strongly favors reflective optics
Signal-to-Noise Ratio, Optics Cost, Focal Plane Cost	19 cm telescope aperture, 16 detectors in track
Wide swath, Wide dynamic range	Well-baffled Rotating Telescope Serving All Bands Including Day/Night Band
Economical performance to 13 microns	Photovoltaic HgCdTe Array Detectors & Readout IC
Radiometric Uncertainty 2% Vis, 0.4% - 7% IR	On-board calibration using blackbody, solar diffuser with stability moniter, space view with lunar calibration opportunities
Polarization Uncertainty 2% Vis, 0.4% - 7%	

Copyright © 2002 Raytheon Company
An unpublished work. All rights reserved.

3 Focal Planes (4 FPAs) Cover VIIRS Spectrum

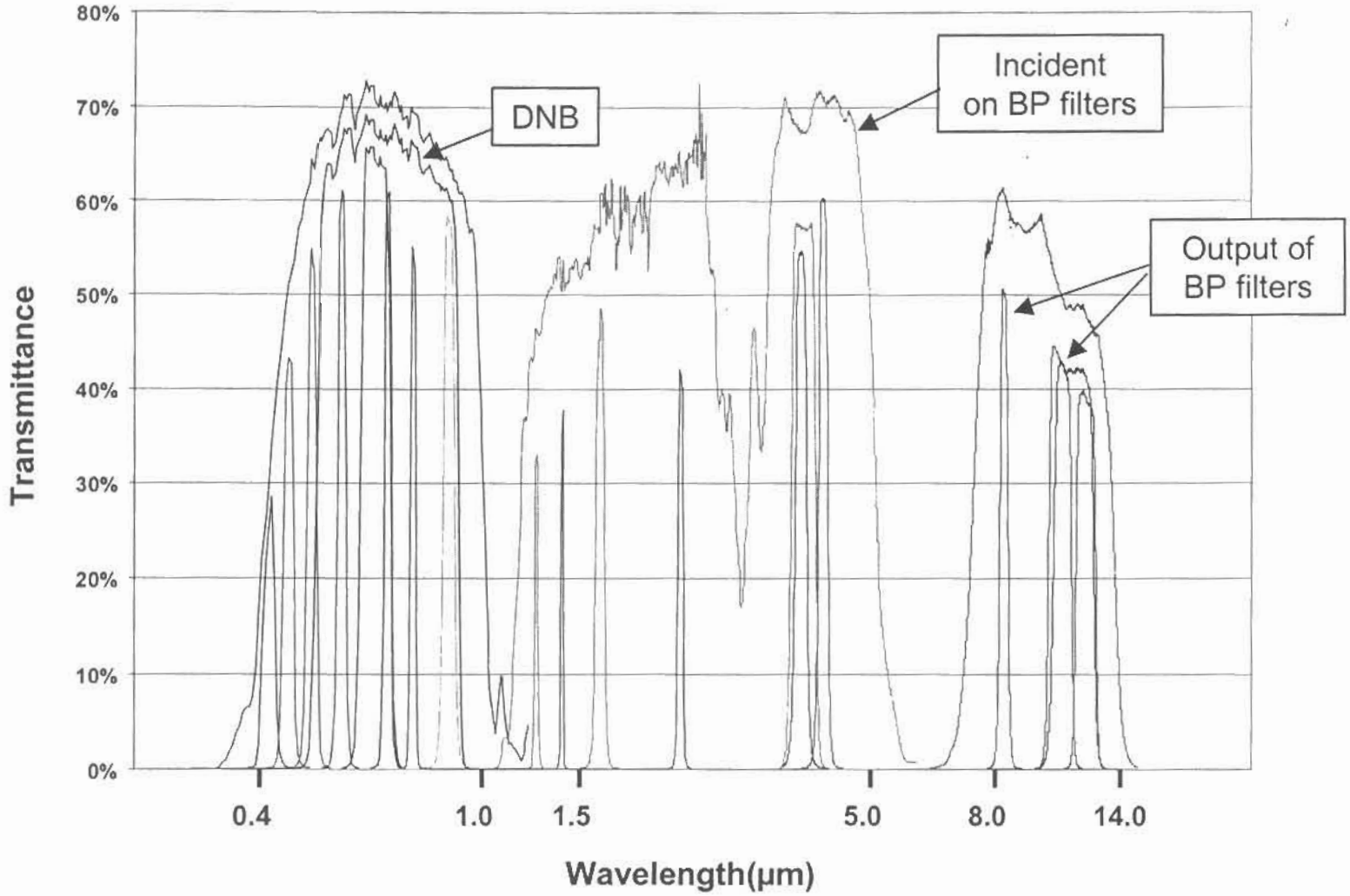

Copyright © 2002 Raytheon Company
An unpublished work. All rights reserved.

AS AMENDED

Raytheon

NPOESS

Three Co-Registered FPAs With 0.8 Deg. x 0.8 Deg. Field Drives Optical Design

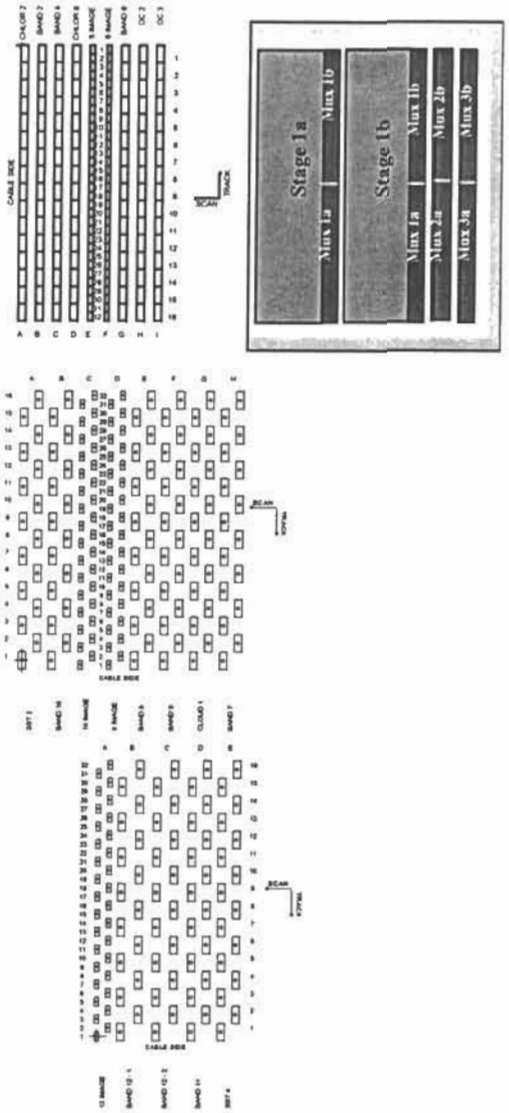

- VisNIR PIN diode array/ROIC hybrid colocated with Day/Night Band monolithic CCD
- S/MWIR & LWIR FPAs: Photovoltaic HgCdTe
  - Integrated "Microlens" arrays reduce background noise
- All FPA performance parameters meet Threshold requirements & approach Objectives
- Optical alignment of all FPAs provides optimum band-band registration

AS AMENDED

Copyright © 2002 Raytheon Company
An unpublished work. All rights reserved.

Raytheon

NPOESS

Solar Impingement in Terminator Orbit Influenced Sensor Design

- Scan cavity tips toward Sun (up to 27 degrees)
- Results in small angle between scan limit and solar vector (≈ 7 degrees)
- Wide variation in Beta angle does not allow single sunshade design

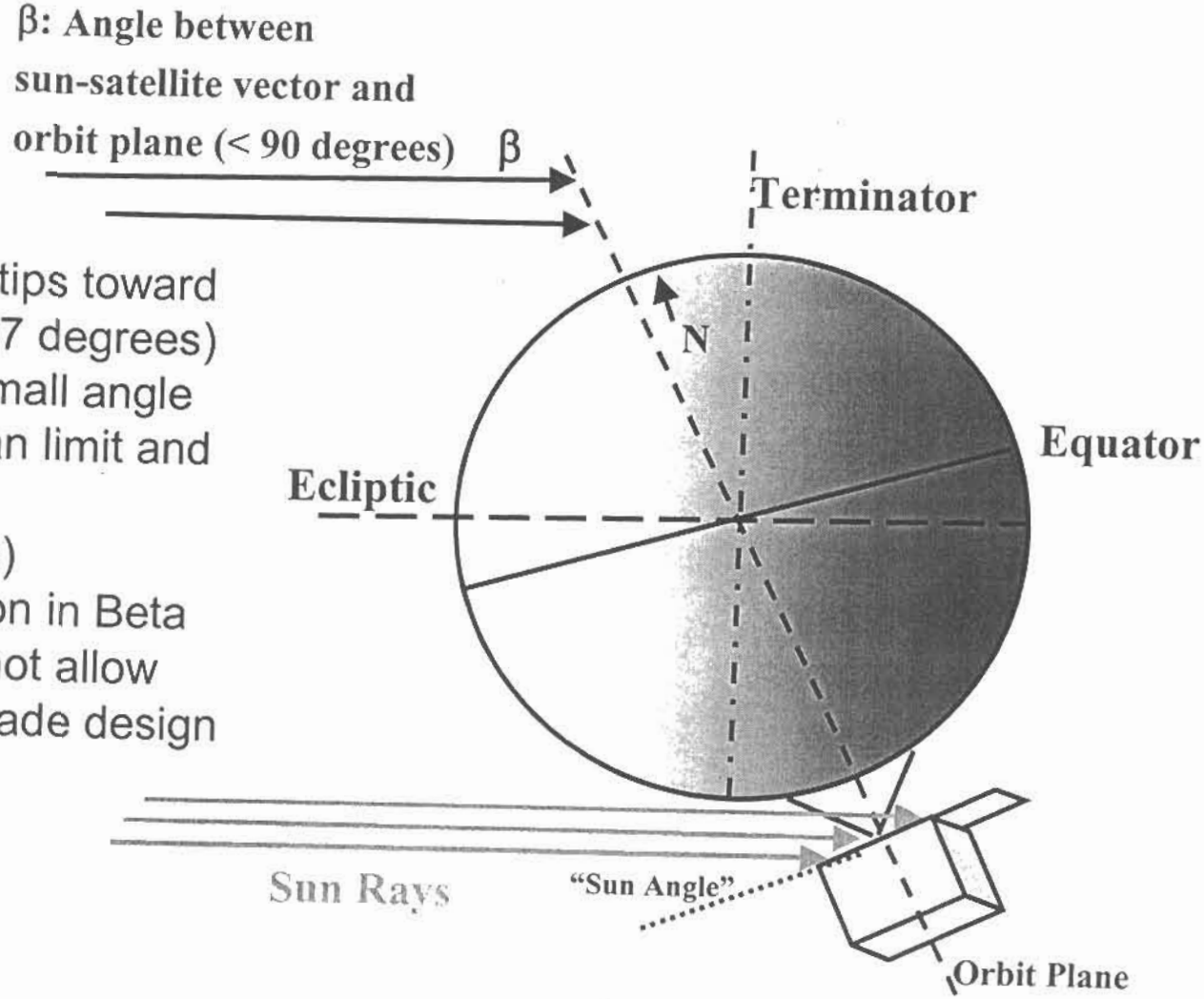

Copyright © 2002 Raytheon Company
An unpublished work. All rights reserved.

Rotating Telescope Provides Solar Impingement Rejection in Terminator

A Scan-Mirror Design Requires Spacecraft Mounted Glare Shield

Rotating Telescope Has Minimum Sensitivity to Sun Impingement

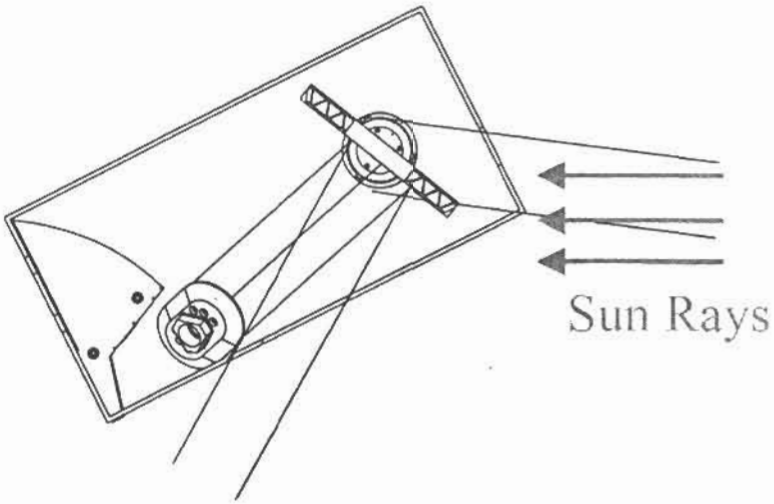

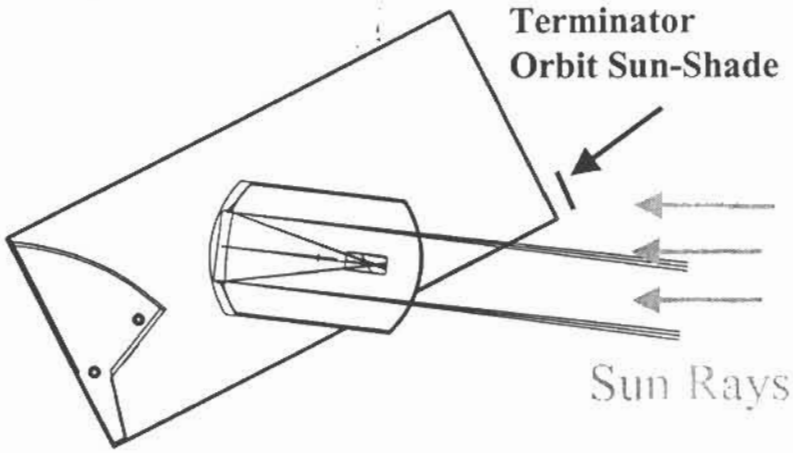

Nadir

Worst-case Terminator Orbit Sun Impingement

Rotating telescope enabled sensor suite fusion

Copyright © 2002 Raytheon Company
An unpublished work. All rights reserved.

Raytheon

NPOESS

Optics Trades Resulted in Low Cost, Low Risk Design

- State-of-practice post polished, diamond point turned (DPT) technology enabled consideration of Day/Night Band integration into main scanner
  - Demonstrated low scatter performance on Raytheon programs
- Bolt together optics for telescope and aft imagers makes three mirror and four mirror forms affordable
  - Dramatically reduces time required for alignment
  - Provides high fidelity performance over the large optical extent required for adjacent Vis/NIR and DNB focal planes

Copyright © 2002 Raytheon Company
An unpublished work. All rights reserved.

Post-polished Telescope Provides Required Low Light Level Scatter Performance

Performance Comparison: Scene to Scatter Ratios for standard versus post-polished telescope(s)

Low Light Level Sensor Type	Affordable Diamond Point Turned (DPA) Optical Finish	Integrated Scene to Scatter Ratio Min.	Max.
Mulitple telescope (8) Integrated in Main Scanner	Standard	13	27
	Post-polished	125	150

Integrated Scene-to-Scatter ratio over entire low-light range
(7E-4 to 4E-9 watt/cm^2 sr)
EOL prediction based on CL-450 cleanliness level

Single post-polished telescope provides affordable performance

Copyright © 2002 Raytheon Company
An unpublished work. All rights reserved.

Raytheon

NPOESS

Single Sensor VIIRS Improves Data Quality Reduces Integration Costs

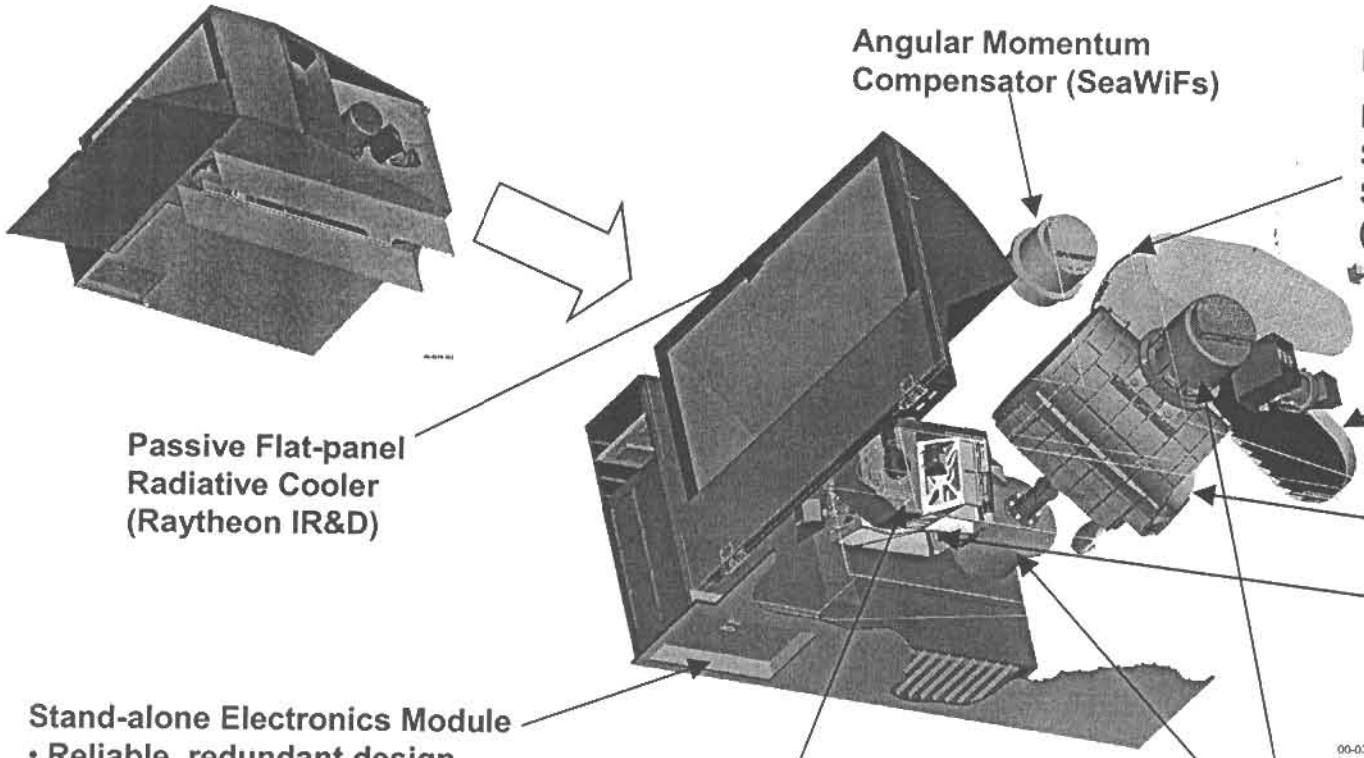

Angular Momentum Compensator (SeaWiFs)

Full-aperture Calibrators:

Reflective Spectralon Solar Diffuser (TRMM-VIRS)

Emissive V-Groove Blackbody (MODIS Design)

Passive Flat-panel Radiative Cooler (Raytheon IR&D)

Diamond-turned Postpolished All-reflective Optics:
- Rotating Telescope 3-mirror Anastigmat
- Aft Optics 4-mirror Anastigmat

Stand-alone Electronics Module
- Reliable, redundant design
- Reprogrammable in flight
- EMI-tight package

High-performance 2nd-generation Focal Planes

Scan Control
- MODIS & SeaWiFs Based Optical Encoders
- <30 µrad Uncertainty

Copyright © 2002 Raytheon Company
An unpublished work. All rights reserved.

All-Reflective Optical System: Low Distortion, Low Stray Light Susceptability

- Well-Baffled Rotating 3-Mirror Afocal Anastigmat Telescope (TMA)
  - Outstanding sharpness & very low scatter
  - Derived from Raytheon military optical systems
- Half-Angle Mirror Relay to Stationary Optics
- Separate 4-Mirror Anastigmat Aft Imager
- 2 Dichroic Beamsplitters define spectra for 3 Focal Planes
- Economical diamond-turned, postpolished bolt-together telescopes

Copyright © 2002 Raytheon Company
An unpublished work. All rights reserved.

Raytheon

NPOESS

VIIRS Phase II Optical Design Optimized for Enhanced Performance

Optical System
Updated focal length
Updated FOV (FPA extents)

Status
Design complete
Toleranced for manufacturability

Rotating Telescope
Reduced distortion
Reduced wavefront error
Improved packaging

Aft Optics Imager
Reduced distortion
More uniform wavefront error
Reduced pupil aberrations
Improved packaging
Increased back focal length

Half-Angle Mirror
Reduced angles of incidence
Optimized pupil location for Minimum HAM size and Greater clearances at EOS

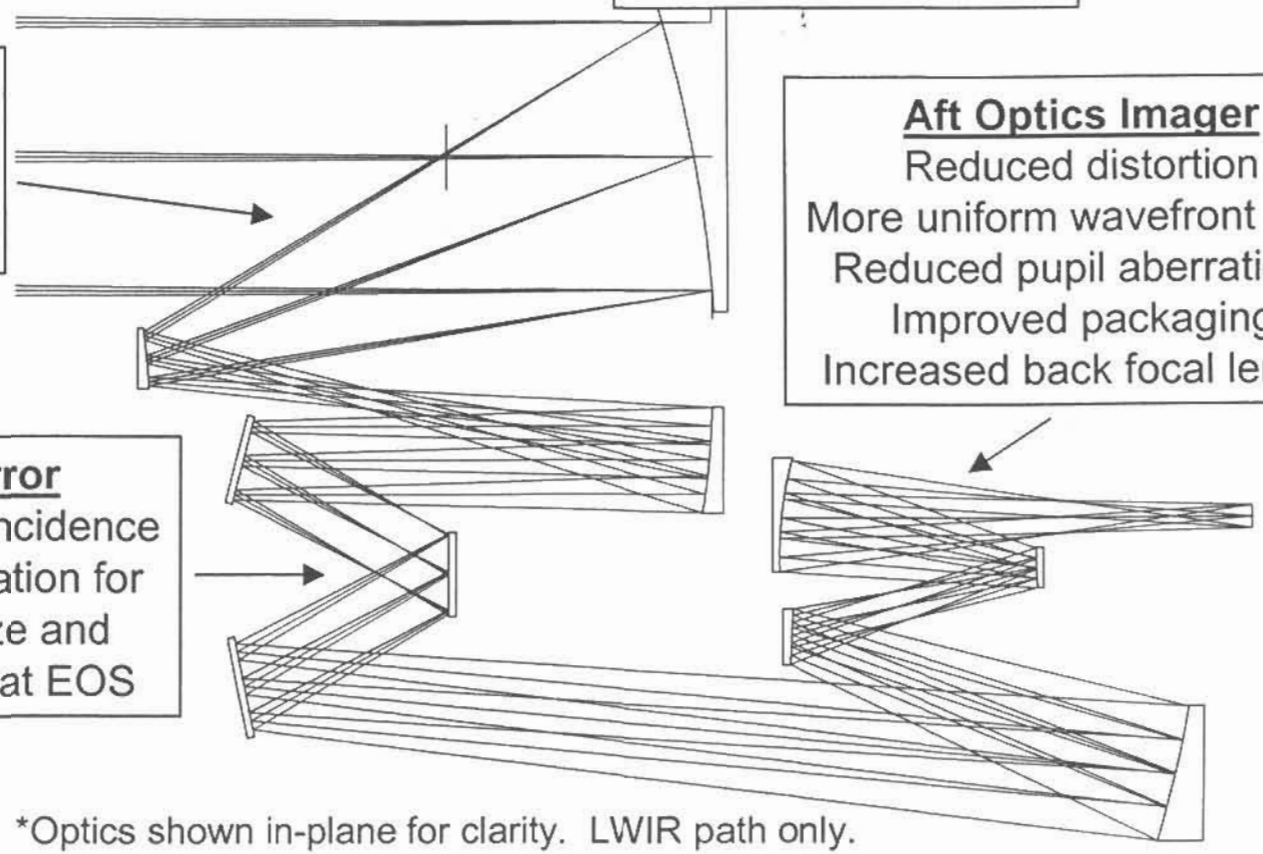

*Optics shown in-plane for clarity. LWIR path only.

Copyright © 2002 Raytheon Company
An unpublished work. All rights reserved.

Raytheon

NPOESS

RTA is a High Performance, Afocal TMA and Fold Mirror

- Off-axis, 4X afocal TMA telescope
  - EPD = 190.5 mm
  - FOV = 1.235° (scan) x 0.817° (track)
- All conic design (no general aspheres)
- Ease of fabrication, alignment and test at both component and subsystem level
- IIP allows field stop for solar/stray light rejection
- Telescope exit pupil located near HAM to minimize footprint
- Constant rate rotating telescope assembly
- Fold mirror #1 rotates with TMA telescope assembly

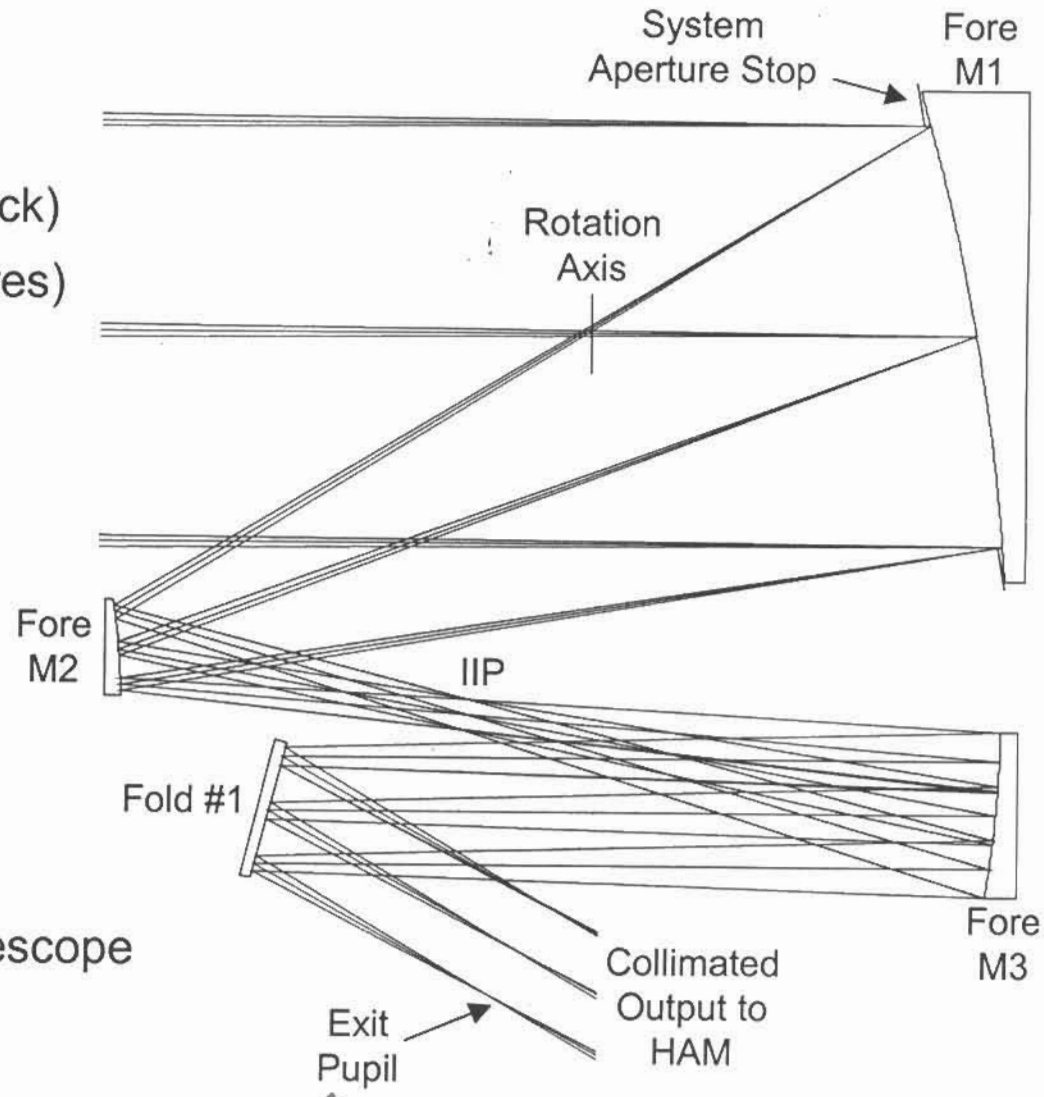

Copyright © 2002 Raytheon Company
An unpublished work. All rights reserved.

Raytheon

Optical Sub-Assemblies within the Optical Mechanical Module

NPOESS

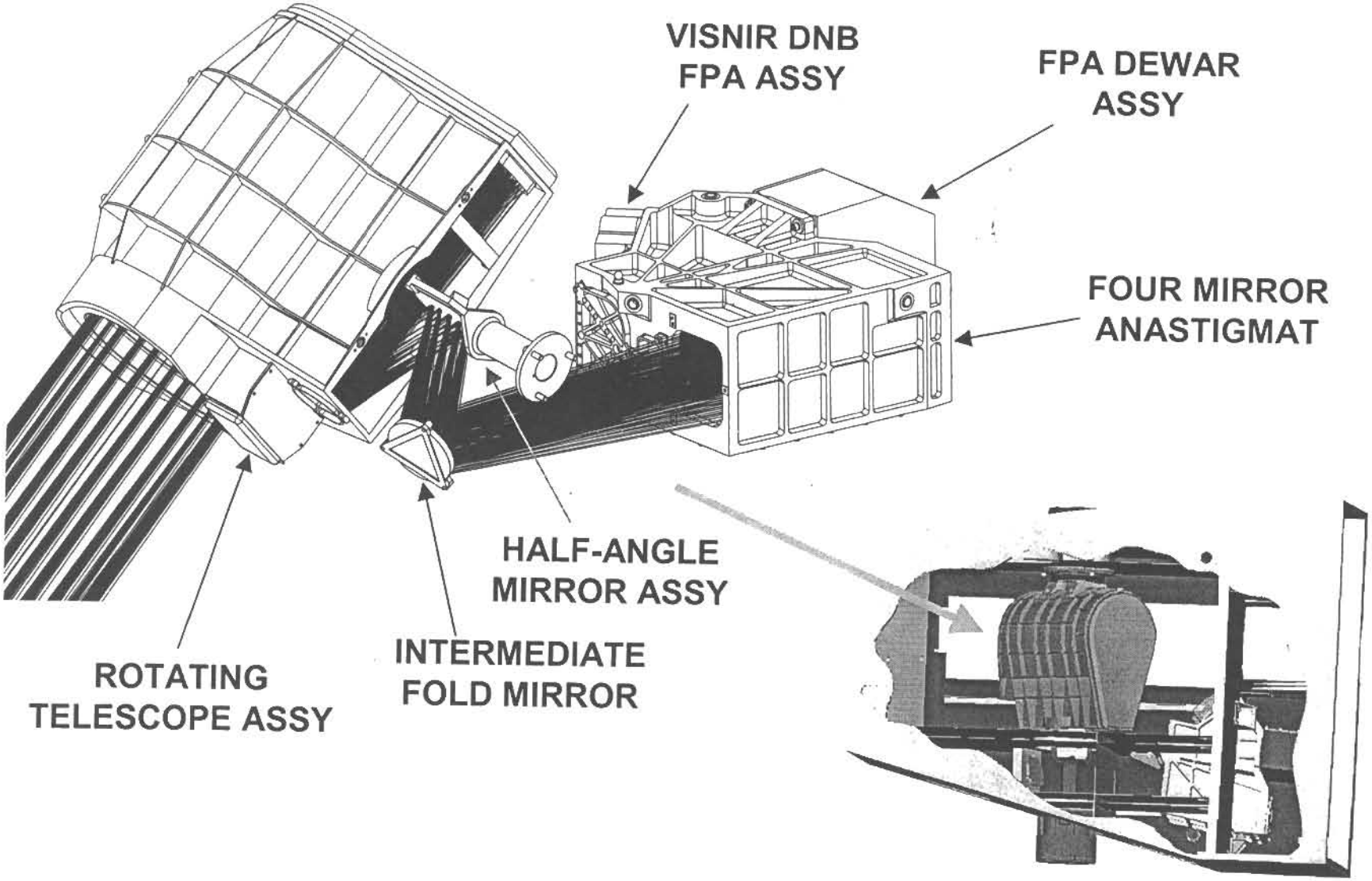

Copyright © 2002 Raytheon Company
An unpublished work. All rights reserved.

Half-Angle Mirror Facilitates Rotating Telescope Assembly with Fixed Aft Optics

- Constant rate, double-sided HAM rotates at 1/2 speed of telescope assembly
- Effectively "derotates" input beam and directs scene energy into fixed aft optics
- HAM rotates about its centerline
- Telescope exit pupil located near HAM to minimize footprint

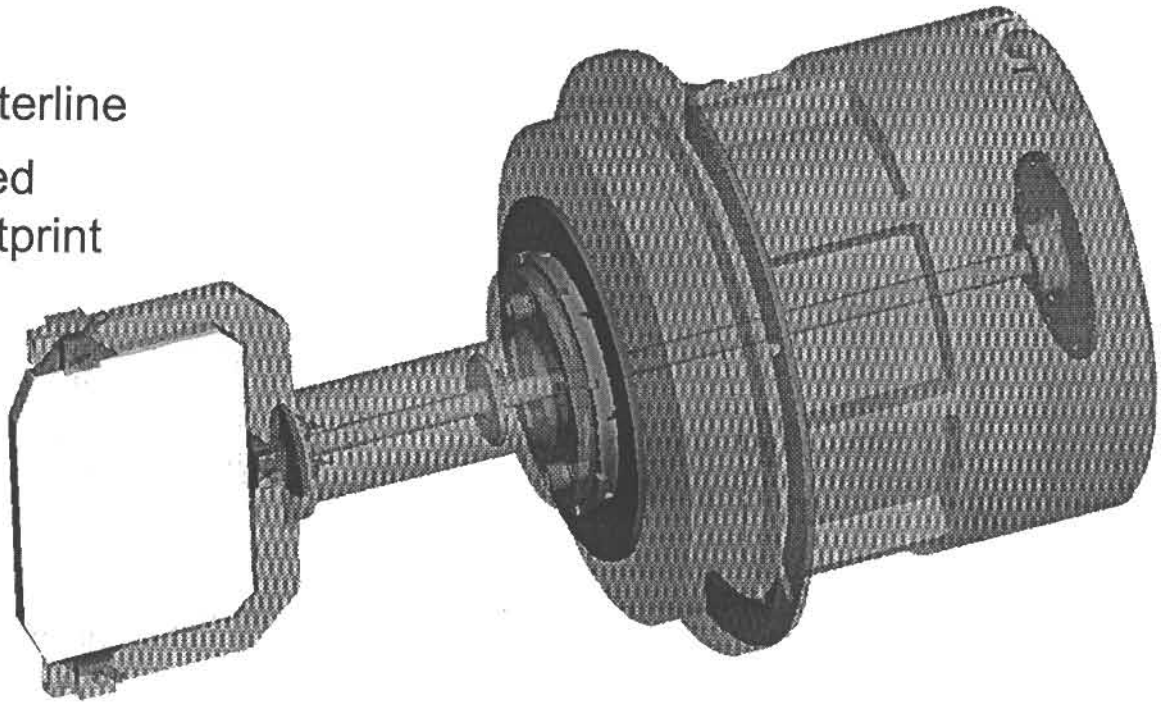

Copyright © 2002 Raytheon Company
An unpublished work. All rights reserved.

Raytheon

NPOESS

Aft Optics Assembly

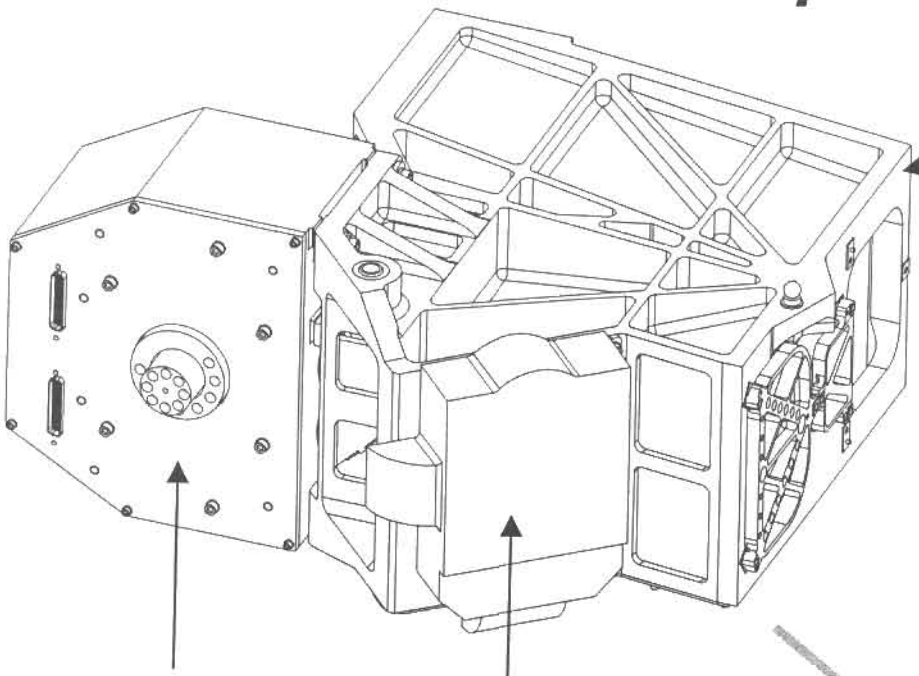

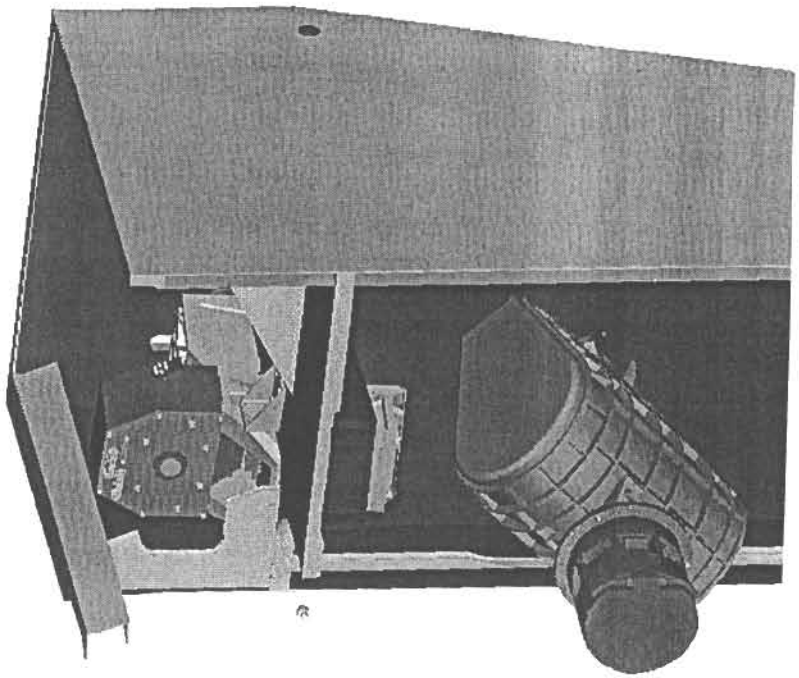

Copyright © 2002 Raytheon Company
An unpublished work. All rights reserved.

AS AMENDED

Raytheon

Aft Optics Components

NPOESS

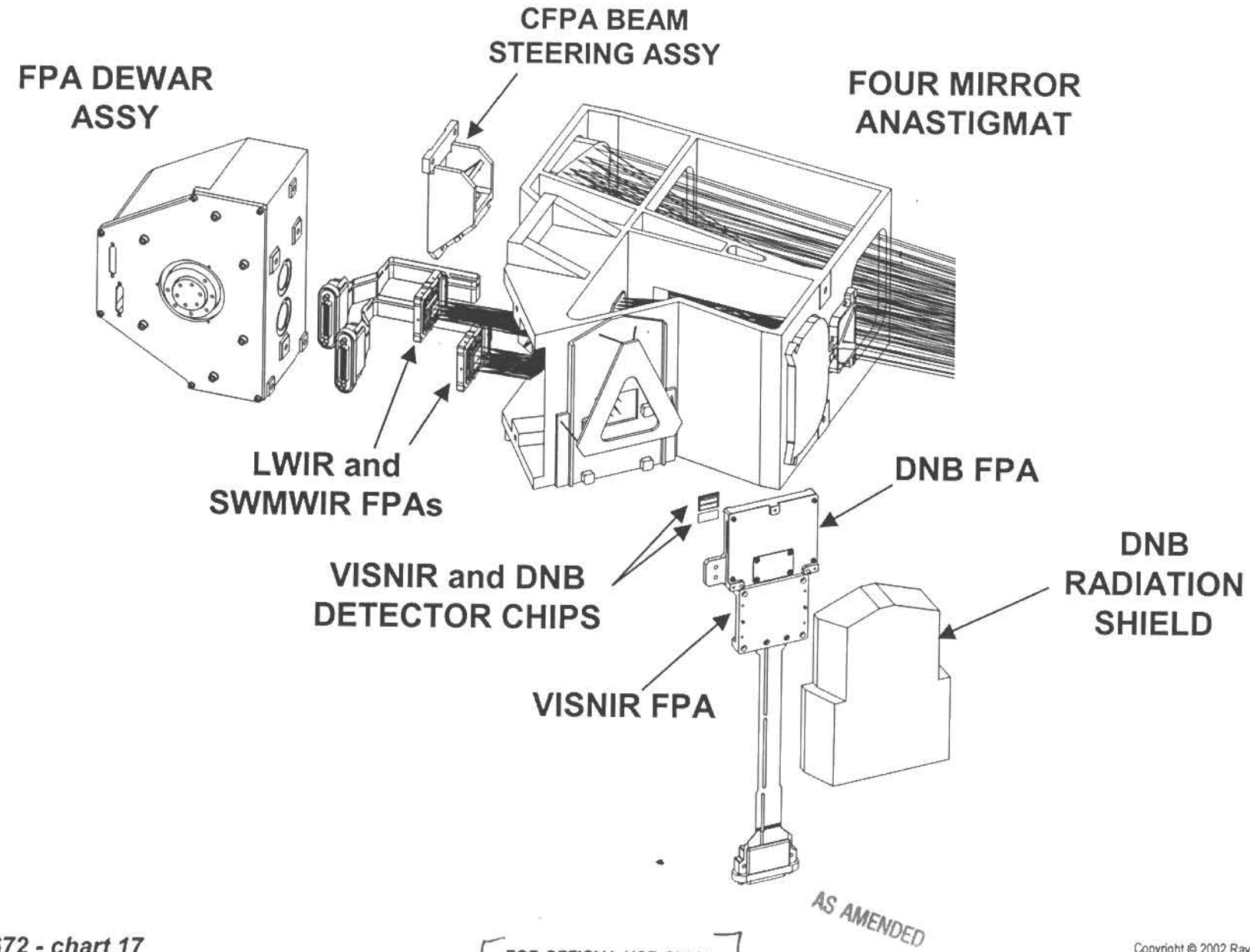

AS AMENDED

Copyright © 2002 Raytheon Company
An unpublished work. All rights reserved

Aft Optics FMA Maintains High Performance Over Expanded FOV

- Compact, all reflective imager
  - EPD = 47.625 mm
  - FOV = 4.94° (scan) x 3.27° (track)
  - F/6 (EFL = 285.25 mm)
- Off-axis FMA requires general aspheres to achieve performance
- IIP allows field stop for solar/stray light rejection
- Accessible, real exit pupil relayed to IR detectors by microlens arrays (not shown)
- Image plane AOIs minimized (0-12°)

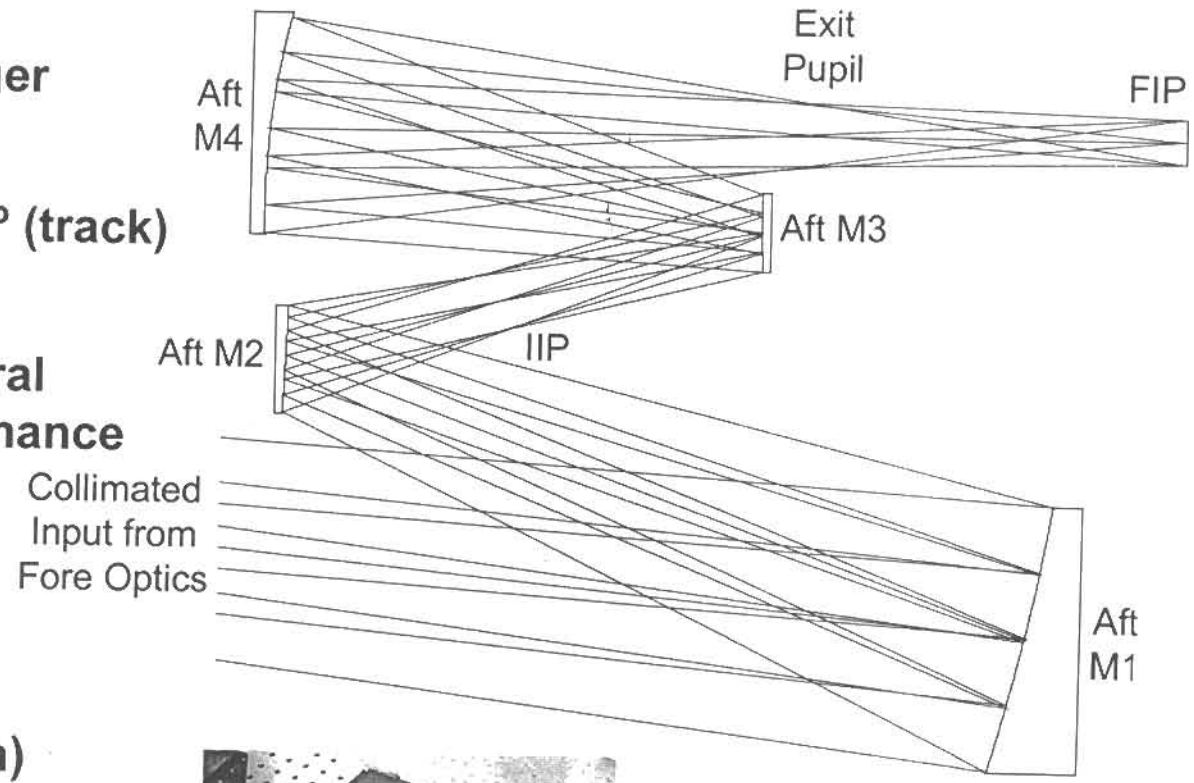

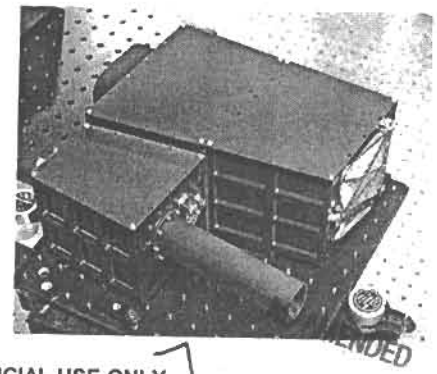

Copyright © 2002 Raytheon Company
An unpublished work. All rights reserved.

Raytheon

NPOESS

Back End Optics Provide Spectral Separation into Three FPA Channels

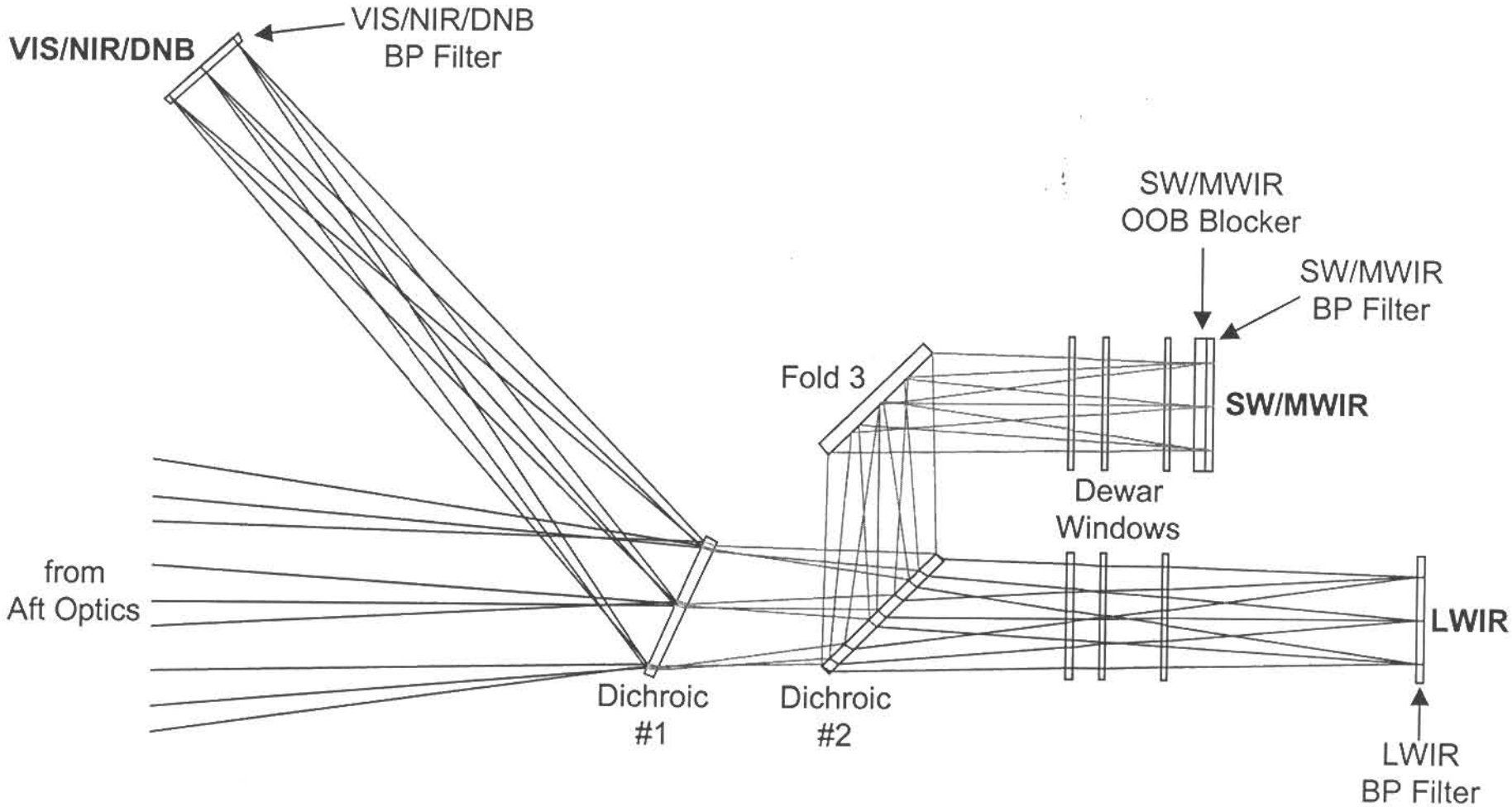

*Optics shown in-plane for clarity. Microlens arrays and detectors not included.

Copyright © 2002 Raytheon Company
An unpublished work. All rights reserved.

AS AMENDED

Raytheon

NPOESS

Microlens Array Optimizes Radiometric Performance

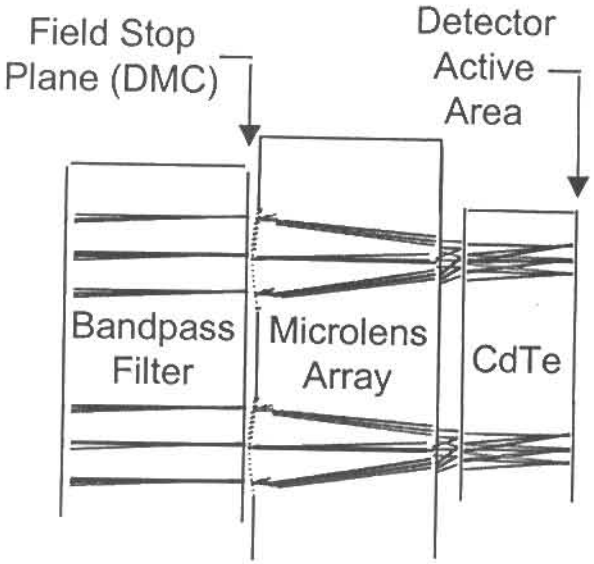

- Microlens array relays system entrance aperture onto detectors
- ~F/1.0 microlenses minimize detector area and reduce noise
- Convex-plano microlens design eases fabrication
- Monolithic microlens array simplifies dewar assembly and alignment
- 1 mm thick Si substrates for both SW\MWIR and LWIR channels
- Each microlens operates slightly off-axis to center pupil image on rectilinear detector grid
- Microlens design is complete
- First round 100 x 100 microlens array delivered and tested
- Second round arrays in fabrication

AS AMENDED

Copyright © 2002 Raytheon Company
An unpublished work. All rights reserved.

AMENDED

Raytheon

NPOESS

Optical Performance Requirements Allocated from Sensor Specification are Met

Level 3 Optical Performance Requirement	Paragraph	Allocation Value	Predicted Performance	Verification Method
Rotating Telescope	OPM0001	360 Deg. Rotation	Complies	I
# Spectral Regions (# FPs)	OPM0004	20 Bands, 3 Focal Planes	Complies	I
Spectral Bands	OPM0004	Table 1	PDR Spectral Band Chart	I
FOV	OPM0005	1.4 Deg scan x 0.8 Deg track	Complies	A
EFL	OPM0005	1141 mm	Complies	T, A
Field Stop Dimensions	OPM0005	Table 2	Complies	T
Energy on Detector	OPM0010	100%	PDR EOD Chart	A
Optical MTF	OPM0008	Table 3	PDR MTF Chart	T, A
Transmittance	OPM0009	Tables 4 & 5	PDR Transmittance Chart	T, A
Aperture Size	OPM0009	190.5 mm	Complies	I
HAM Reflectance vs Scan Angle	OPM0014	Table 7	Complies	T, A
Polarization	OPM0011	Table 6	PDR Polarization Chart	T, A
Signal to Scatter Ratio	OPM0012	≥ 10	PDR SSR Chart	T, A
Optical Crosstalk	OPM0015	Table 7	Complies	A
Ghosting	OPM0015	Table 7	Complies	A
Wavelength Stability	OPM0015	Table 7	Complies	T
Bandwidth Stability	OPM0015	Table 7	Complies	T
Calibration Views	OPM0002	BB, Space, Solar, Lunar	Complies	D
Distortion	OPM0025	< 1.0%	Complies	A
EFL Tolerance	OPM0025	±0.15%	Complies	T, A
Field Stop Location Tolerance	OPM0025	1.0%	Complies	T
Fits Within Package	OPM0046	129 cm x 65 cm x 138 cm	Complies	I
Design Life (yrs)	OPM0029	7 on-orbit, 8 storage	Complies	A

AS AMENDED

Copyright © 2002 Raytheon Company
An unpublished work. All rights reserved.

Raytheon

NPOESS

End-to-End Optical Design Satisfies MTF Allocation with Margin

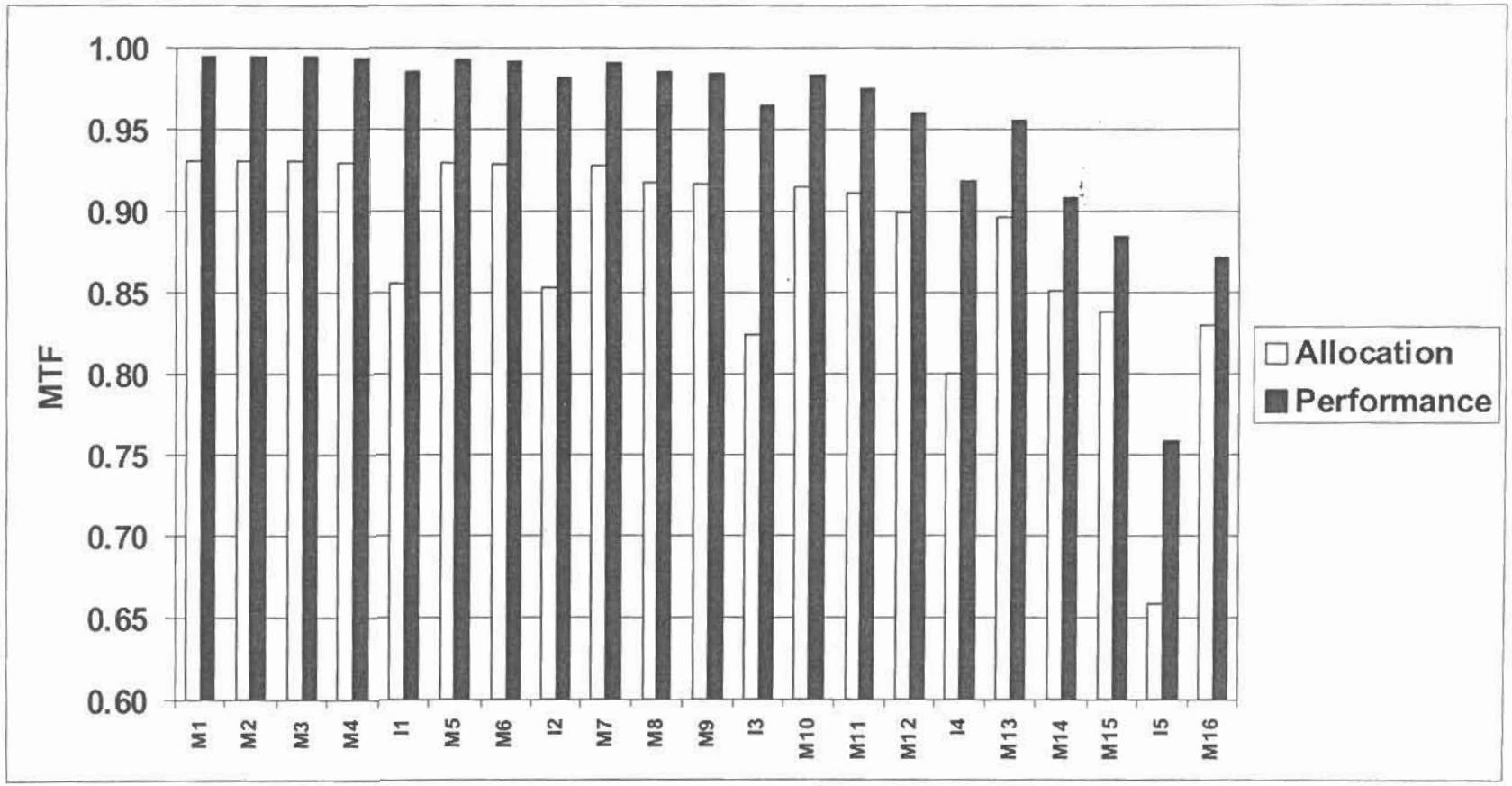

Spatial frequency = 1.4 cyc/mm for radiometric bands
Spatial frequency = 2.8 cyc/mm for imaging bands

Copyright © 2002 Raytheon Company
An unpublished work. All rights reserved.

Band-to-Band Registration Requirements Limit Optical Distortion

- Band-to-band registration (BBR) requirements flowed to sensor system based on EDR performance requirements
- Optical requirements derived from sensor level BBR requirements
  - relative distortion at field stop plane (< 25μm)
  - effective focal length (efl) tolerance (0.15%)
  - optical/mechanical assembly/alignment tolerances
- Individual band shifts (scan direction) minimize ±relative centroid offsets and improves overall distortion map (shifts applied to SW/MW/LWIR FPAs only)
- Worst case relative distortion is 15μm in scan and 16μm in track
  - any two detectors/field stops across any FPA
  - unique bandsets required for specific EDRs may exhibit better distortion performance
  - optical distortion is relatively stable with regard to manufacturing, assembly and alignment tolerances
  - detailed tolerancing analysis (in progress) will simulate as-built performance and confirm BBR requirements are satisfied

Copyright © 2002 Raytheon Company
An unpublished work. All rights reserved.

SW/MWIR Energy on Detector

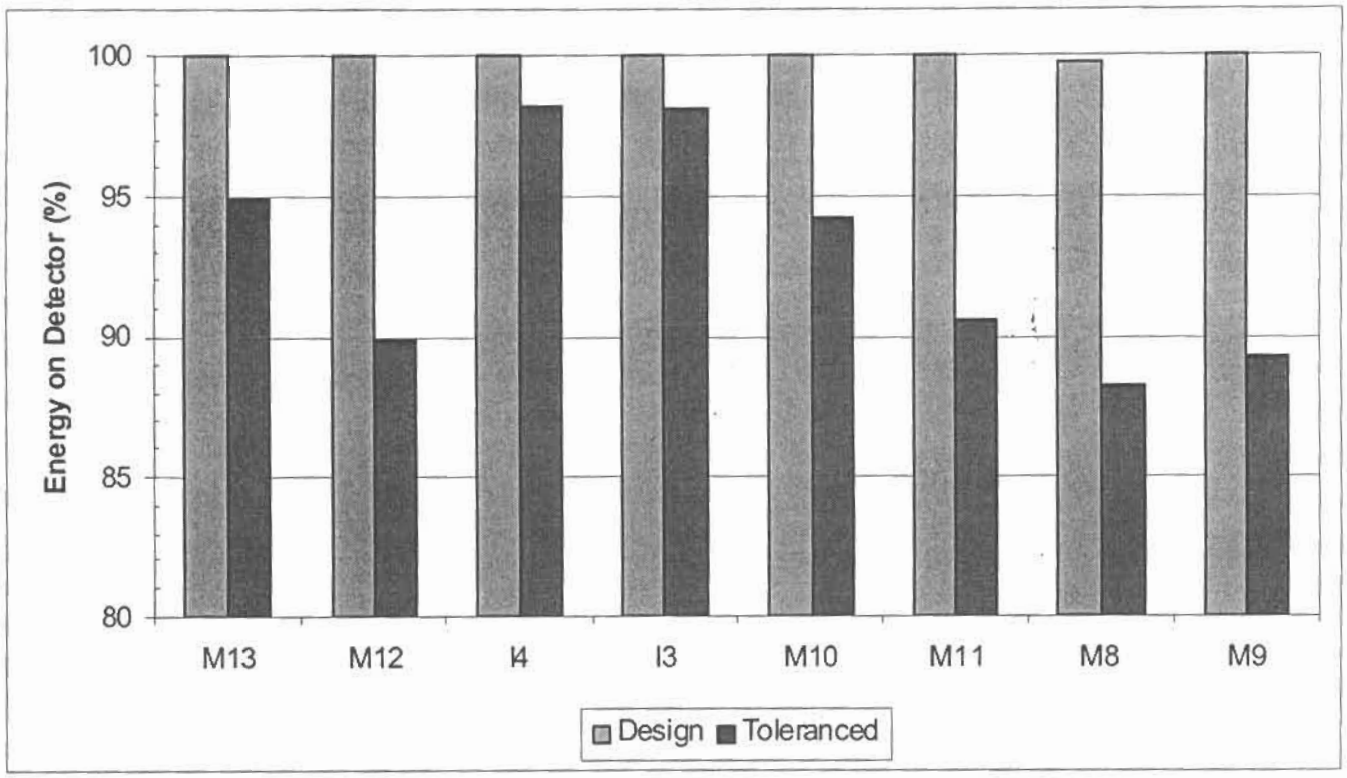

- Optical analysis supplies %EOD to systems engineering for use in the sensor SNR model
  - toleranced data includes radius errors and misalignments
  - Toleranced values represent optics allocation; EOD margin held at system level
- SW/MWIR analysis complete; LWIR in progress
- Investigating higher fidelity modeling techniques using ASAP (SBRS) and analytical phase modeling of near field diffraction (El Segundo)

Copyright © 2002 Raytheon Company
An unpublished work. All rights reserved.

End-to-End Optical Transmittance Satisfies Allocation in All Bands

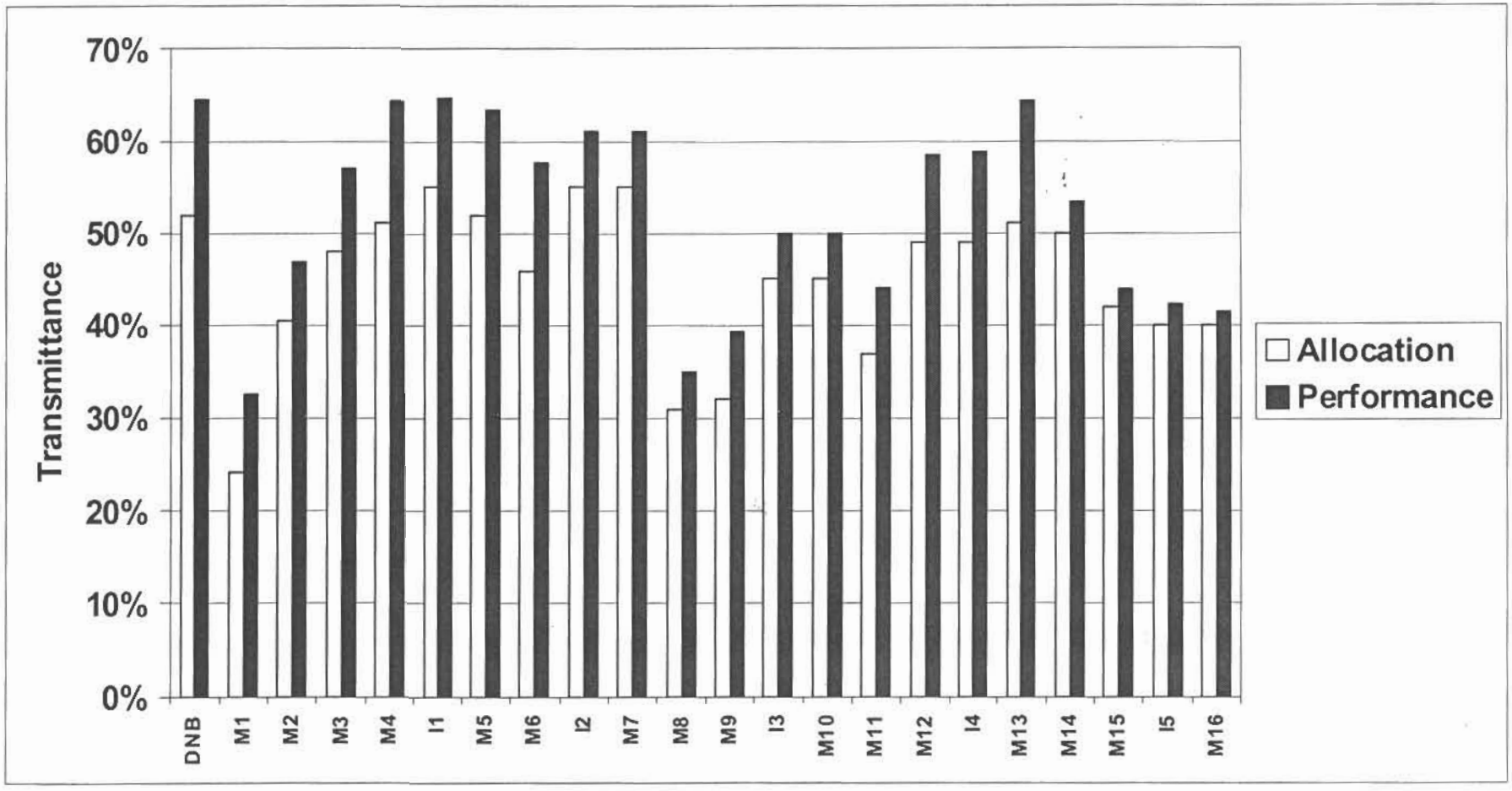

Copyright © 2002 Raytheon Company
An unpublished work. All rights reserved.

Phase II Design Satisfies Polarization Requirements

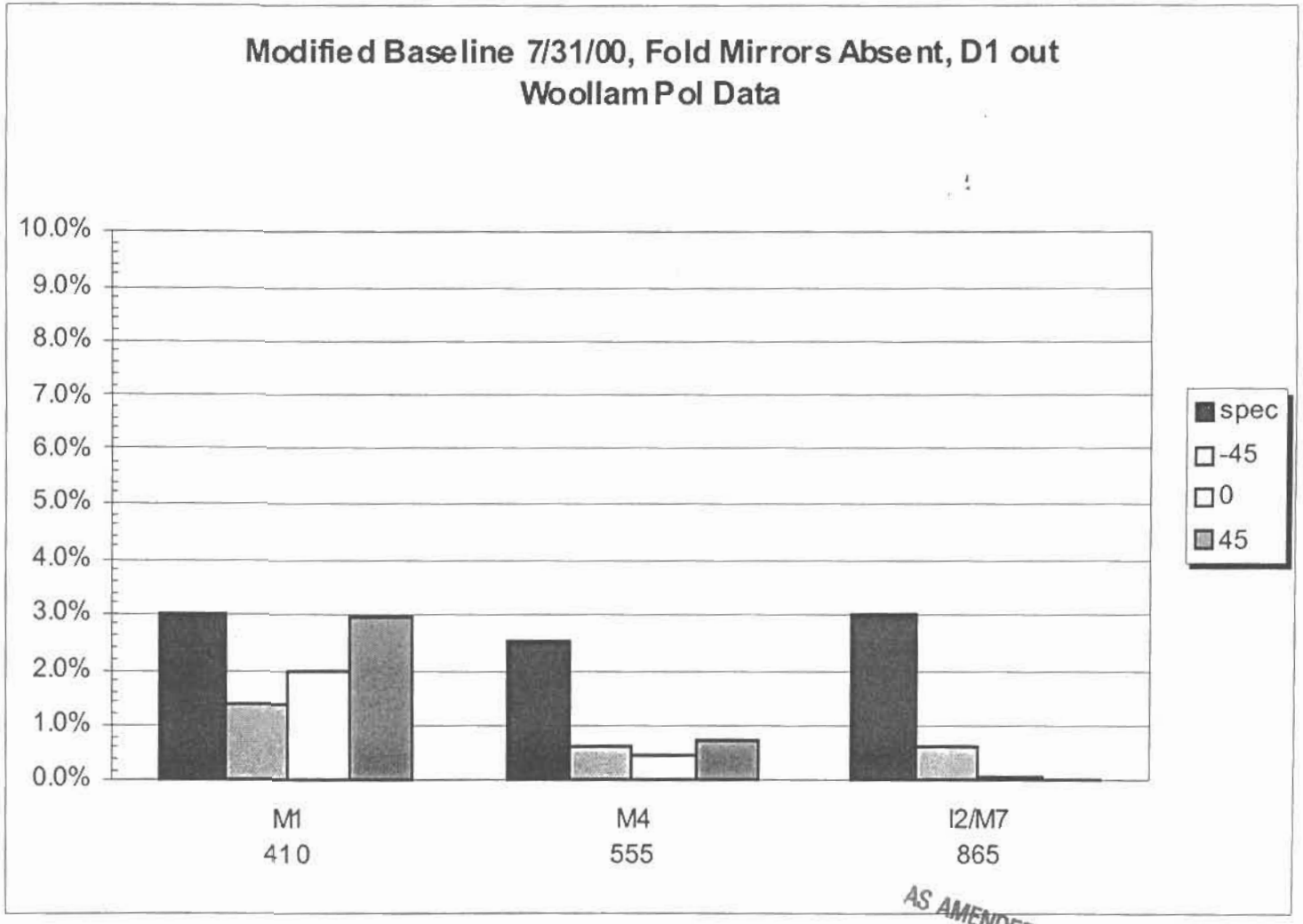

AS AMENDED

Copyright © 2002 Raytheon Company
An unpublished work. All rights reserved.