AN ADVANCED INFRARED EMISSION LIMB SOUNDER FOR NPOESS APPLICATIONS

CONTRACTOR
LIBRARY

DR. MARTY MLYNCZAK

NASA LANGLEY RESEARCH CENTER

DECEMBER 19, 1996

CONTRACTOR
LIBRARY

M-32-18

OUTLINE

- Evolution of infrared limb sounding at Langley
- Review SABER instrument status for TIMED mission
- SABER-NPOESS Baseline Design
  - Spectral Channel Selection
  - Optics
  - MTF Calculation
  - Packaging/Accommodation
  - Retrieval Simulations
- Proposed CY 1997 activities

SABER-NPOESS HERITAGE

SABER

Sounding of the **A**tmosphere using **B**roadband **E**mission **R**adiometry

SABER is an advanced infrared emission limb sounder under development by Langley Research Center for NASA's (Code S) TIMED mission

SABER successfully completed the Preliminary Design Review (PDR) Dec. 12, 1996

SABER to begin Phase C/D April, 1997 (includes a 2 [kg] cryo-cooler being developed by TRW) → 10yr life

SABER Critical Design Review (CDR) scheduled for August, 1997

SABER to be launched on TIMED mission January 2000

SABER will be the most sensitive infrared limb sounder flown to date (30-100 times more sensitive than LIMS) for geophysical applications

SABER-NPOESS INSTRUMENT HERITAGE

The SABER-NPOESS instrument is a miniaturized version of the SABER-TIMED system

No new technology is needed to develop SABER-NPOESS

- The HgCdTe detectors operating at 22 μm require commercially available D* sensitivity

The all-reflective axial-design telescope is derived from SABER-TIMED telescope

- Efficient: 50% throughput to focal plane, including central obscuration
- Straight-forward: axial design is relatively cheap to make and mount
- Robust: strong/light tubular structure w/ compact scan mirror housing

The high optical throughput allows uncooled telescope for SABER-NPOESS with simple interface to spacecraft

SABER-NPOESS INSTRUMENT HERITAGE

SABER-NPOESS uses designs identical to SABER-TIMED:

- Scan mirror subsystem including drive and angle readout mechanisms
- Tuning-fork chopper system
- Cryo-cooler subsystem and cold focal-plane design
- In-flight calibration subsystem
- Data handling and control electronics subsystems

EOL

SABER-NPOESS CHANNEL SELECTION

To meet the NPOESS requirements, a 10 channel SABER instrument is proposed:

Channel	Wavelength	Application
CO_2	(15 μm)	Temperature, Pressure
O_3	(9.6 μm)	Ozone (threshold, objective - both)
H_2O	(6.7, 21 μm)	Water vapor
CH_4	(7.7 μm)	Methane
Aerosol	(8.3, 12.1 μm)	Aerosol extinction

NEN =2.8e-4 # of noise cases = 10

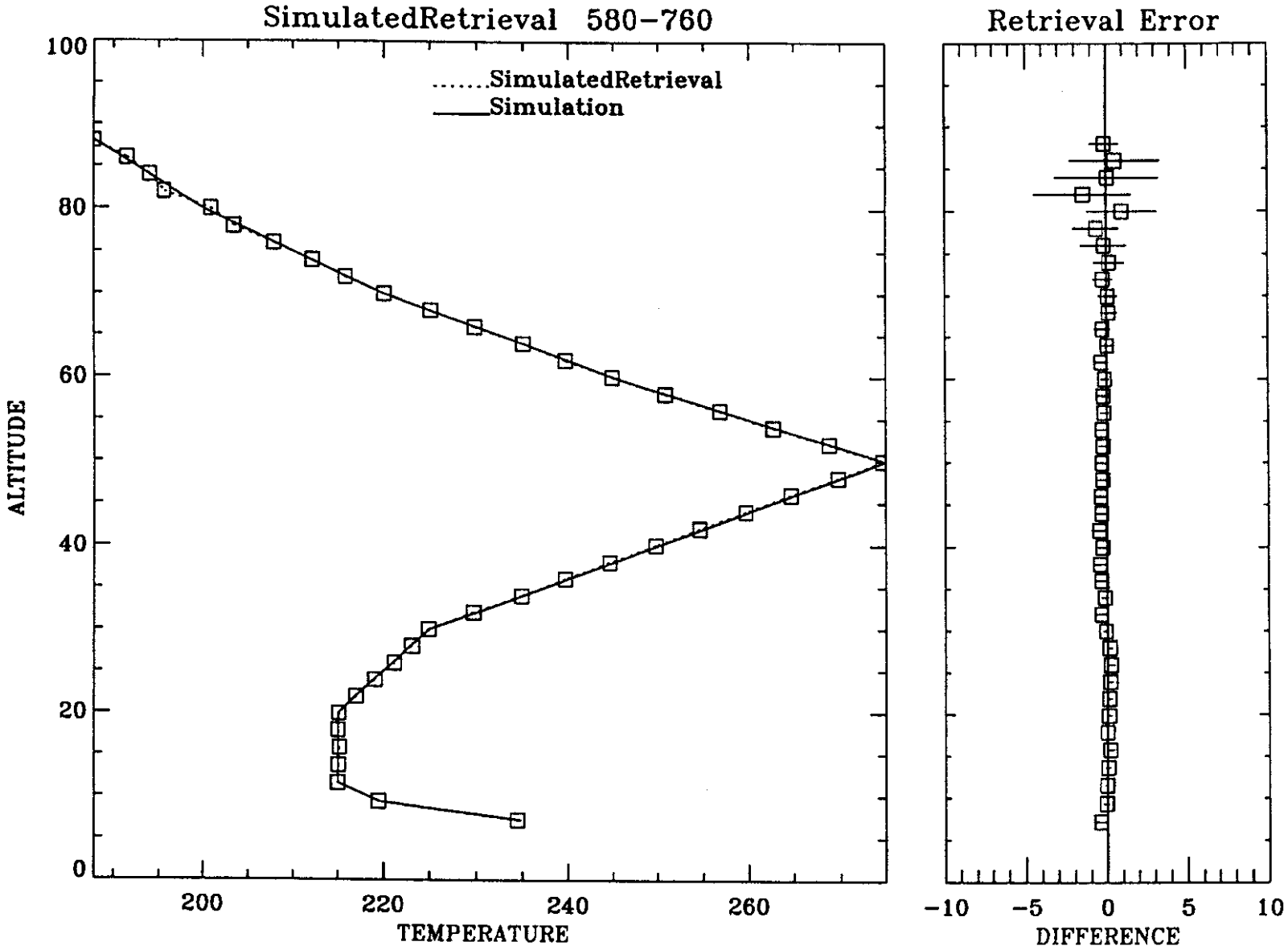

4-Mar-1996 15:51:26.00

SABER T/P

NEN =2.8e-4 # of noise cases = 10

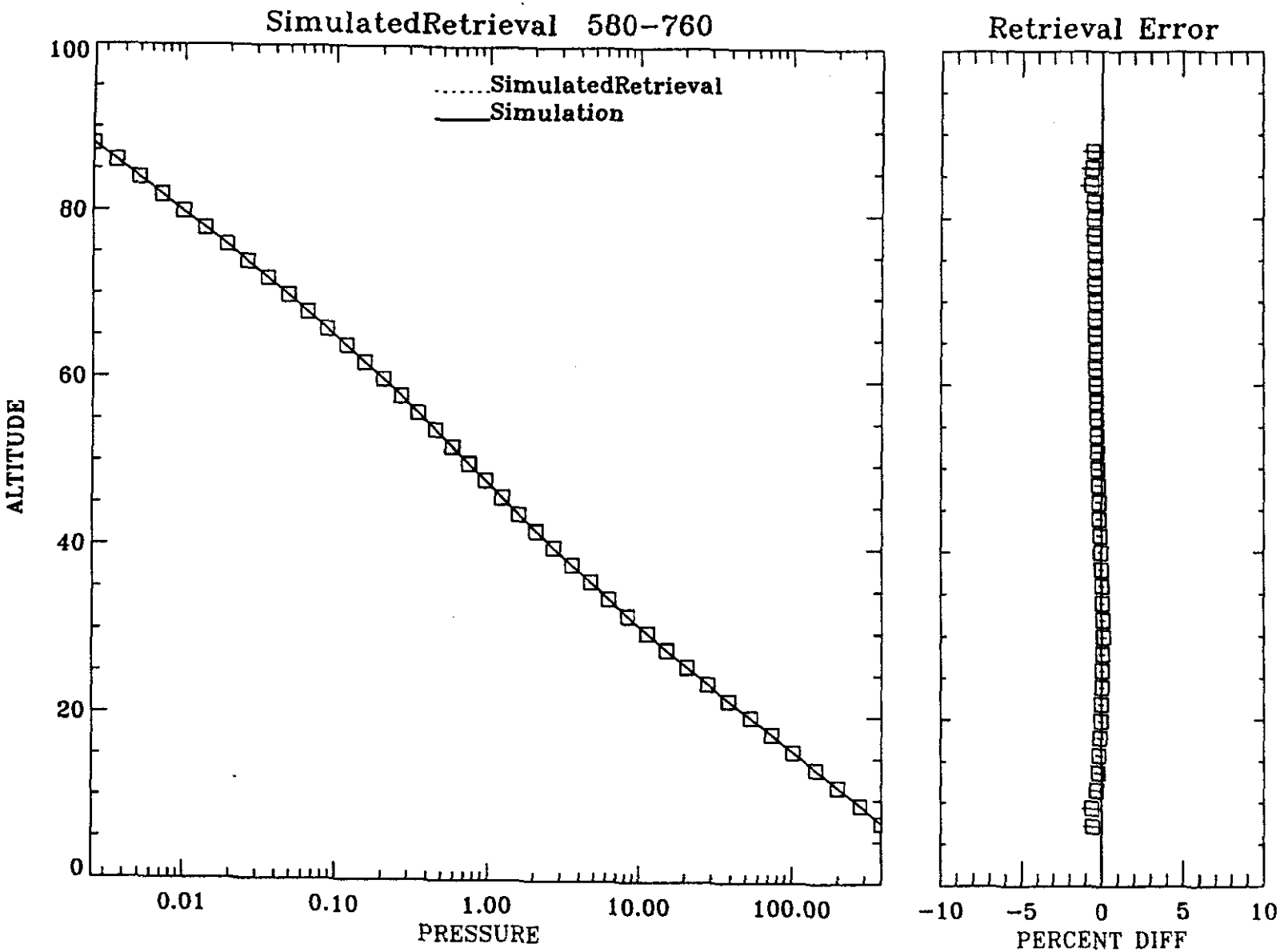

4-Mar-1996 15:51:33.00

SABER T/P

NEN =7.4e-4 # of noise cases = 9

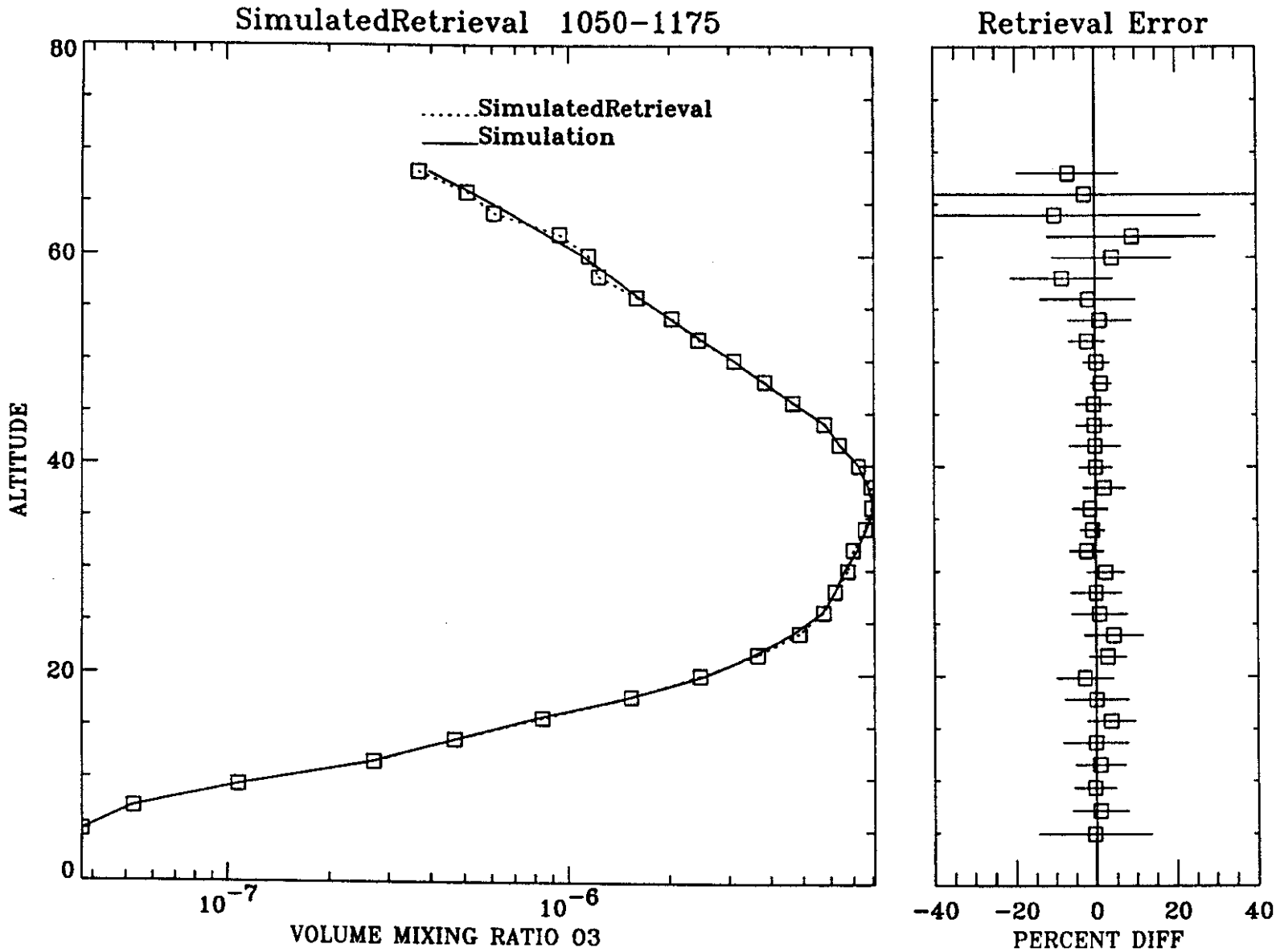

16-Dec-1996 13:57:37.00

NPOESS SABER (1K random T error)

NEN =4.6e-4 # of noise cases = 9

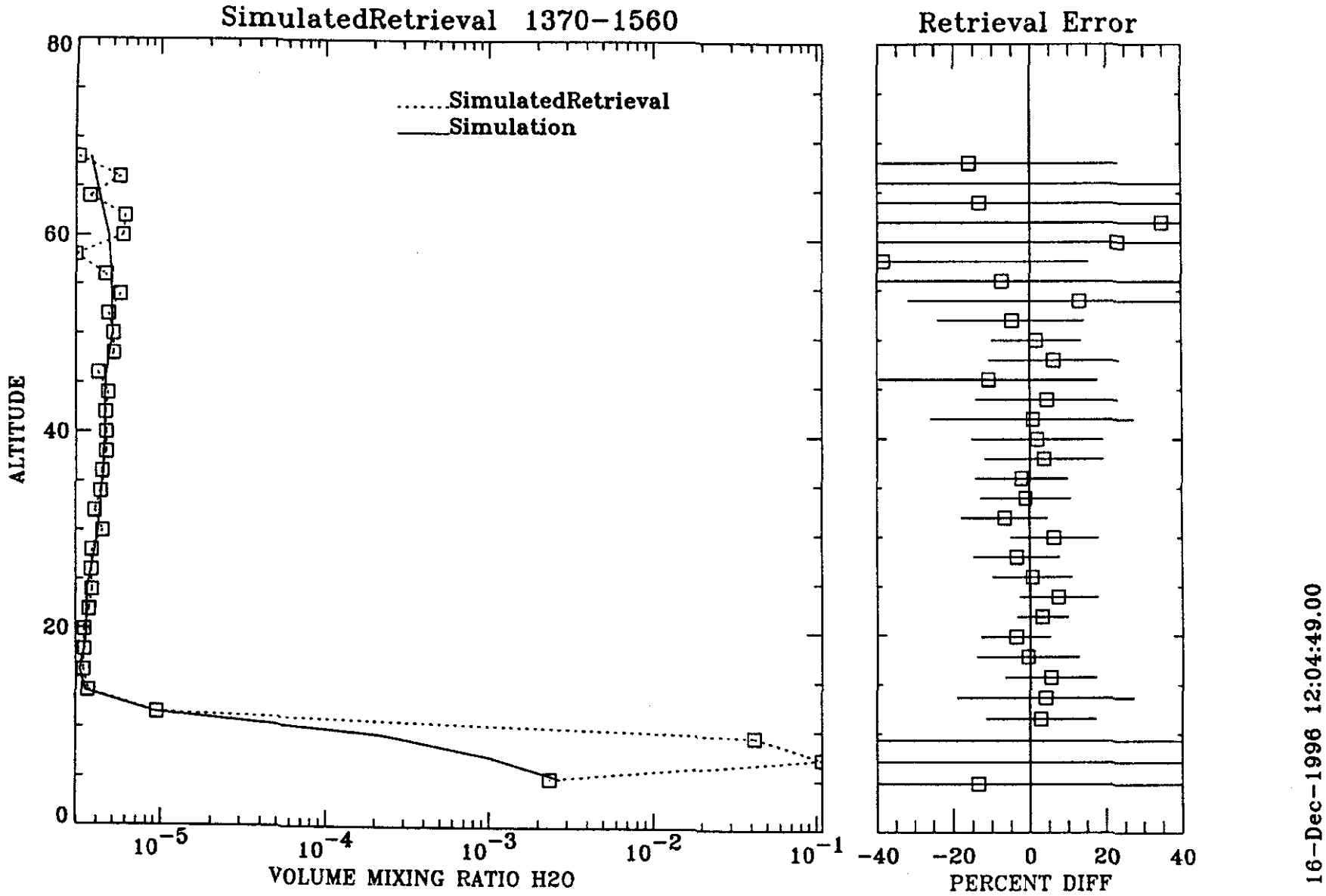

16-Dec-1996 12:04:49.00

SABER NPOESS (1K random T error; mid i.r.)

NEN =5.0e-4 # of noise cases = 9

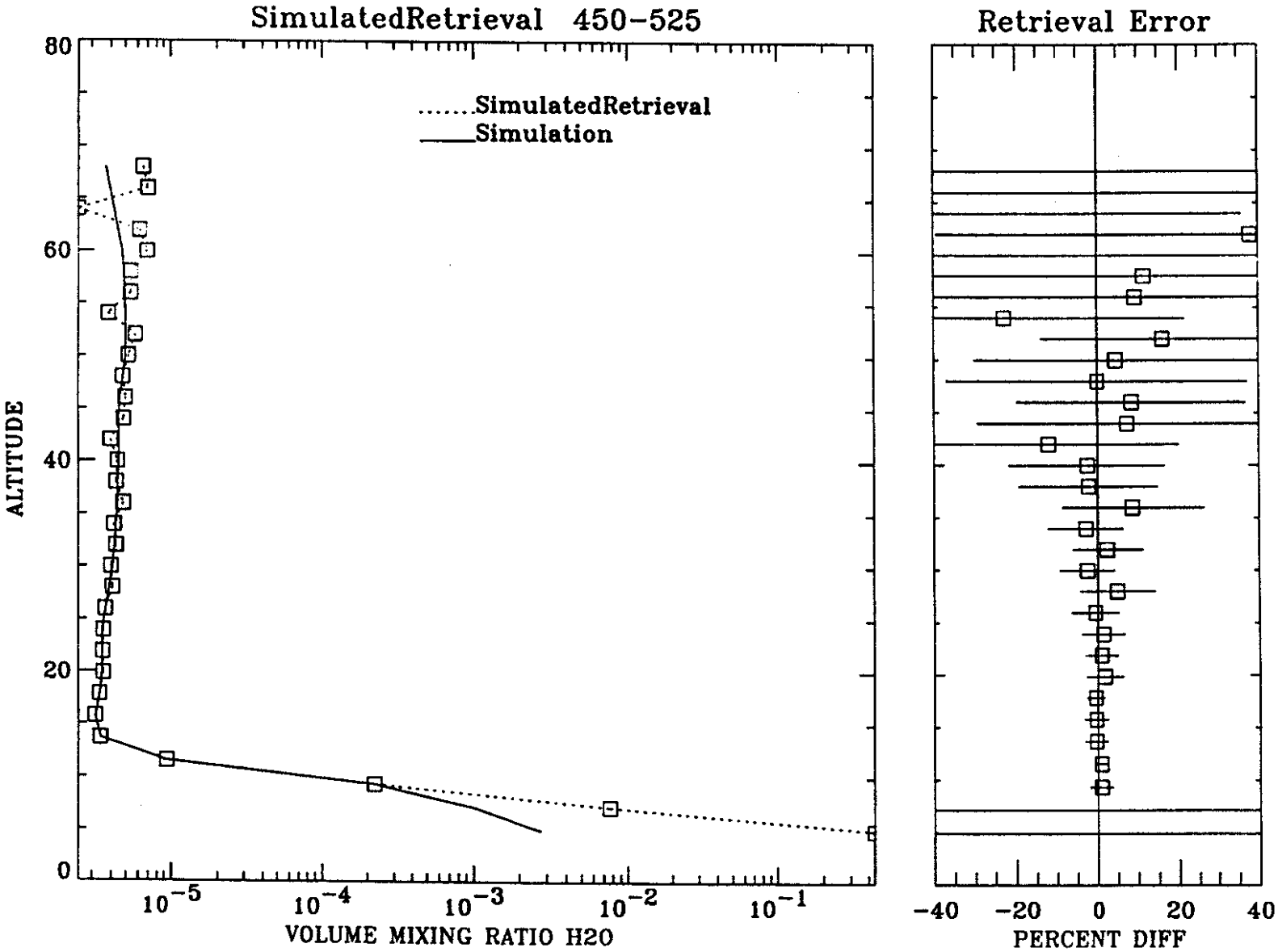

13-Dec-1996 15:27:25.00

NPOESS SABER (1K random T error; far i.r.)

SABER-NPOESS Focal Plane Array Layout

(all dimensions in mm)

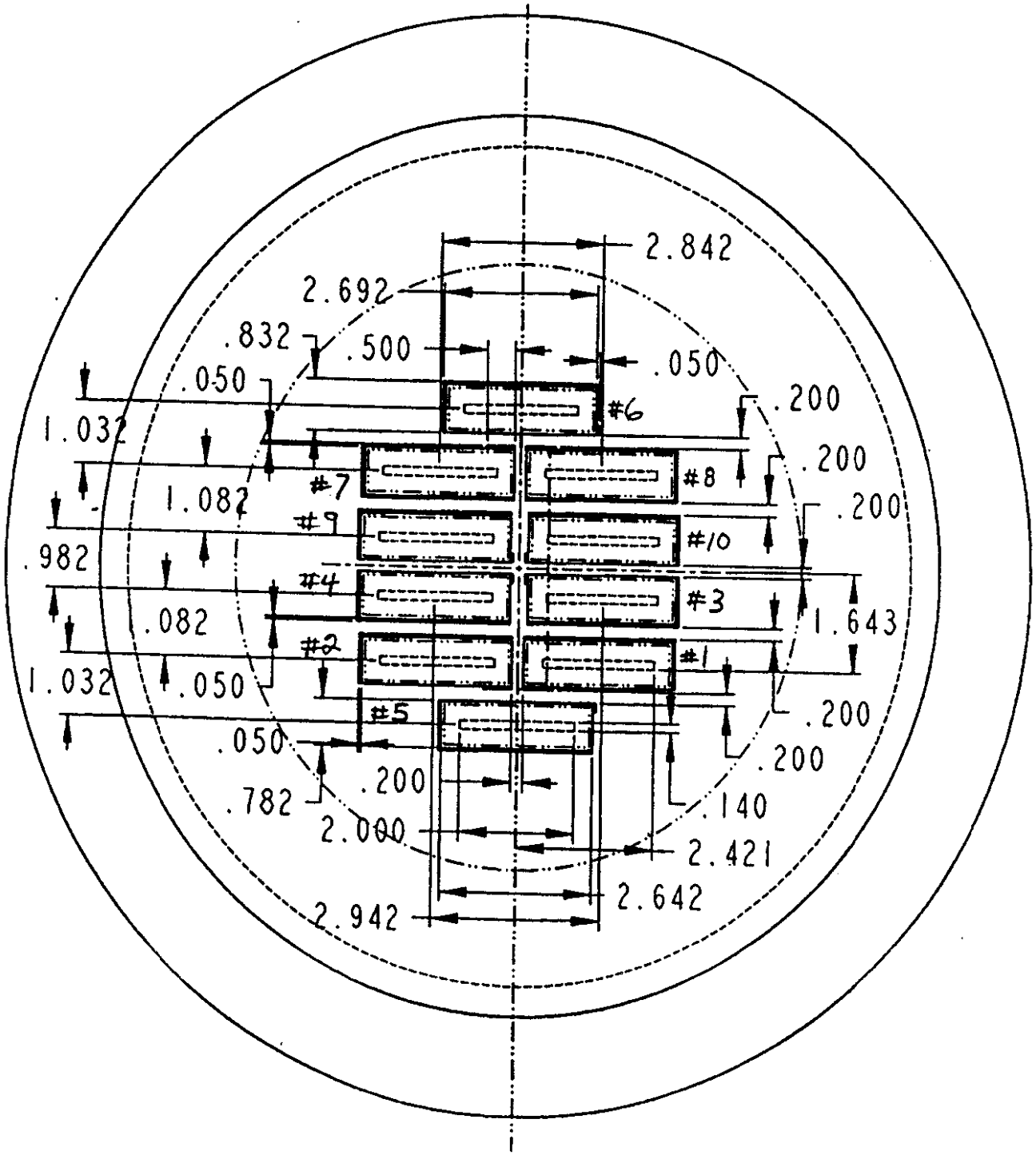

SABER-NPOESS OPTICAL SYSTEM

Type:

- Flat elevation-scan mirror
- Cassegrain telescope
- Clam-shell optical relay

All-reflective on-axis design plus one dewar window

Mechanical tuning fork chopper located at first focal plane

At final focal plane:

- Cold Lyot Stop (to aid off-axis energy rejection)
- CdTe dewar lens-window (6.3 to 22 micron operation)
- Array of 10 discrete HgCdTe detectors each with its spectral filter

SABER-NPOESS RAYTRACE

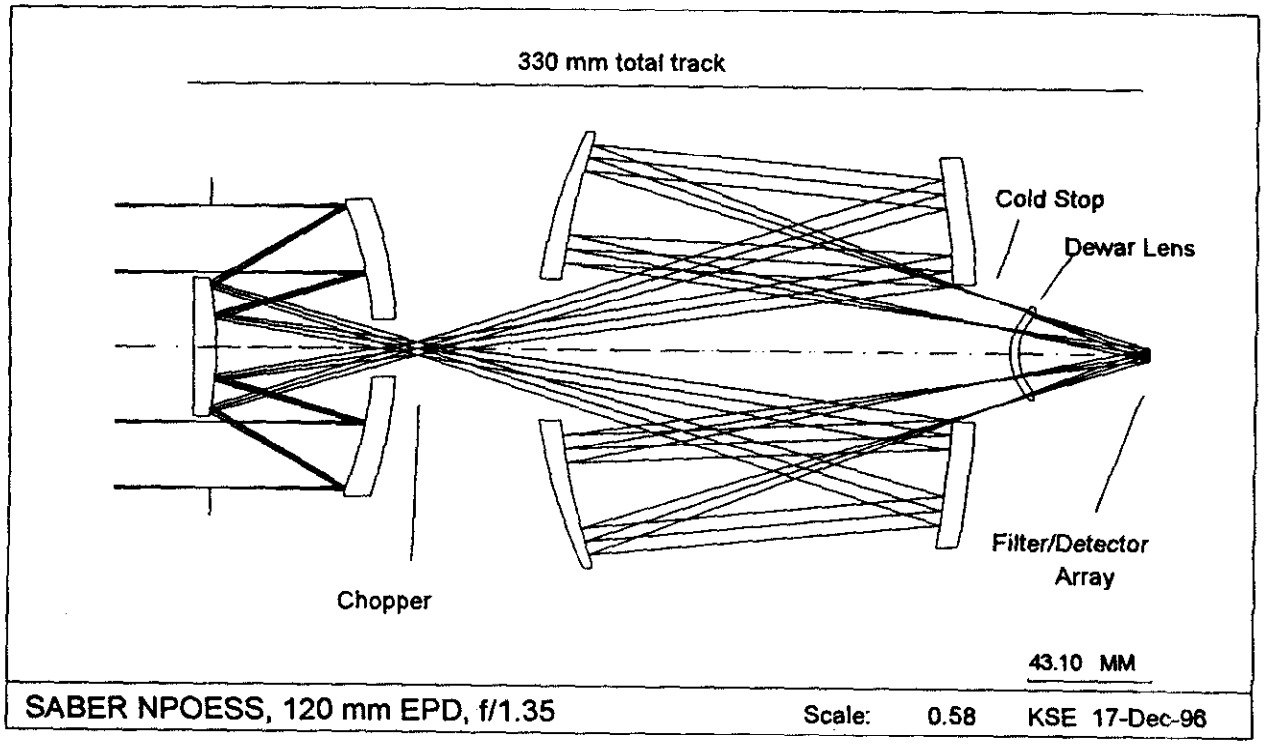

Lens Parameters:
Aperture diameter = 120 mm, 52% obscured
Effective Focal Length = 162 mm (f/1.35)
Wavelength range = 7.6 to 20.6 microns
Dewar Lens material: CdTe

SABER-NPOESS OPTICAL SYSTEM SUMMARY

Key Parameters:

Diameter:	120 mm
Overall length:	295 mm
Effective optical speed:	f /1.35
Overall transmission:	50 percent

Spatial (Vertical) Resolution:

IFOV: 0.48×6 mrad

1.6×20 km at horizon (0.07×1 mm detector size)

MTF response at 0.25 cycles/km:

- Optical response (at furthest off-axis location and at 22 μm): 60 %
- IFOV sin x /x response (for 1.6 km IFOV at tangent point): 80 %
- Overall response at furthest location, longest wavelength: 50 %

SABER-NPOESS VERTICAL RESOLUTION

A key SABER-NPOESS atmospheric science requirement is:

Achieve 2 km or better true vertical resolution
(Obtain two samples per 4-km high atmospheric wave)

The derived SABER-NPOESS instrument requirement is then:

MTF response of at least 50% at 0.25 cycles/km spatial frequency

Two factors determine the MTF response of SABER-NPOESS:
Diffraction blurring of the image
Electronic sampling

These factors are effectively accounted for in the SABER-N design:
Telesocpe diameter: 120 mm
IFOV: 1.6 km

Each IFOV is sampled 5 times
The sampling frequency is 22.5 Hz

The SABER NPOESS instrument can comfortably meet a 2 km vertical spatial <u>resolution</u> requirement

SABER-NPOESS

System Modulation Transfer Function

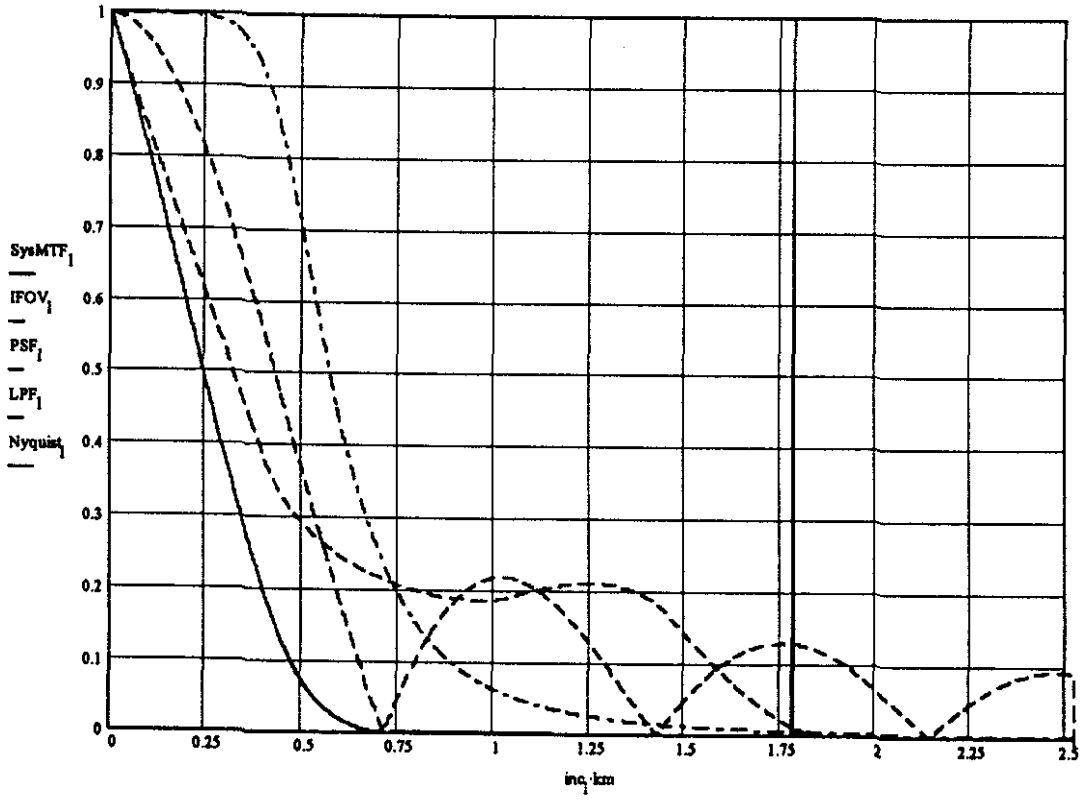

SABER-NPOESS RADIOMETRIC PERFORMANCE

Species	Altitude Range Km	Center Wavelength cm^{-1} (μm)	Five % relative response points cm^{-1}	Detector D* cm·Hz^½/Watt	NER (predicted) $W/cm^2/sr$	NER (required) $W/cm^2/sr$
CO_2 (N)	5 - 65	657 (15.21)	635 - 680	3.76×10^{10}	2.9×10^{-8}	2.8×10^{-8}
CO_2 (W)	5 - 65	670 (14.93)	580 - 760	8.3×10^{9}	2.93×10^{-8}	1.1×10^{-7}
CO_2 (W)	5 - 65	670 (14.93)	580 - 760	8.3×10^{9}	2.93×10^{-8}	1.1×10^{-7}
O_3	8 - 65	1000 (10)	952 - 1053	1.31×10^{10}	1.37×10^{-8}	7.4×10^{-8}
O_3	8 - 65	1075 (9)	1053 - 1176	1.31×10^{10}	1.37×10^{-8}	7.4×10^{-8}
H_2O - 1	10 - 40	487 (20.5)	455 - 526	2.15×10^{10}	2.96×10^{-8}	5.0×10^{-8}
H_2O - 2	10 - 50	1470 (6.8)	1380 - 1560	1.99×10^{10}	3.94×10^{-9}	4.6×10^{-8}
CH_4	10 - 40 **	1299 (7.7)	1235 - 1370	1.83×10^{10}	4.02×10^{-9}	5.0×10^{-8}
Aerosol - 1	10 - 40 **	826 (12.1)	813 - 840	TBD	TBD	TBD
Aerosol - 2	10 - 40 **	1205 (8.3)	1176 - 1235	TBD	TBD	TBD

notes: * Detector D* are for the detector / filter assembly cooled to 77 kelvins
** Value shown is an estimate of altitude range

SABER-NPOESS INSTRUMENT PARAMETERS

SABER-NPOESS Instrument:

Instrument Size: 75 × 50 × 30 cm (29.5× 19.7× 11.8 in.)

Total Mass: 45 Kg

Ave. Power Input: 45 Watts

Data Rate: 4 Kb/sec

SABER-TIMED Instrument (for comparison only):

Instrument Size: 103 × 77 × 60 cm

Total Mass: 61 Kg

Ave. Power Input: 64 Watts

Data Rate: 4 Kb/sec

Spacecraft Accommodation:

Thermally isolated mount (SABER has radiators within its outline shown above)

Clear view to Earth's horizon for 5 in. diam. beam from 0 to 30° depression angle

Spacecraft attitude control: ± 1 deg (3 σ)

Spacecraft attitude knowledge: ± 3 arc-sec (1 σ)

Pointing stability, along scan axis: ±0.0075 deg/sec (3 σ) (for view 90° to ram only)

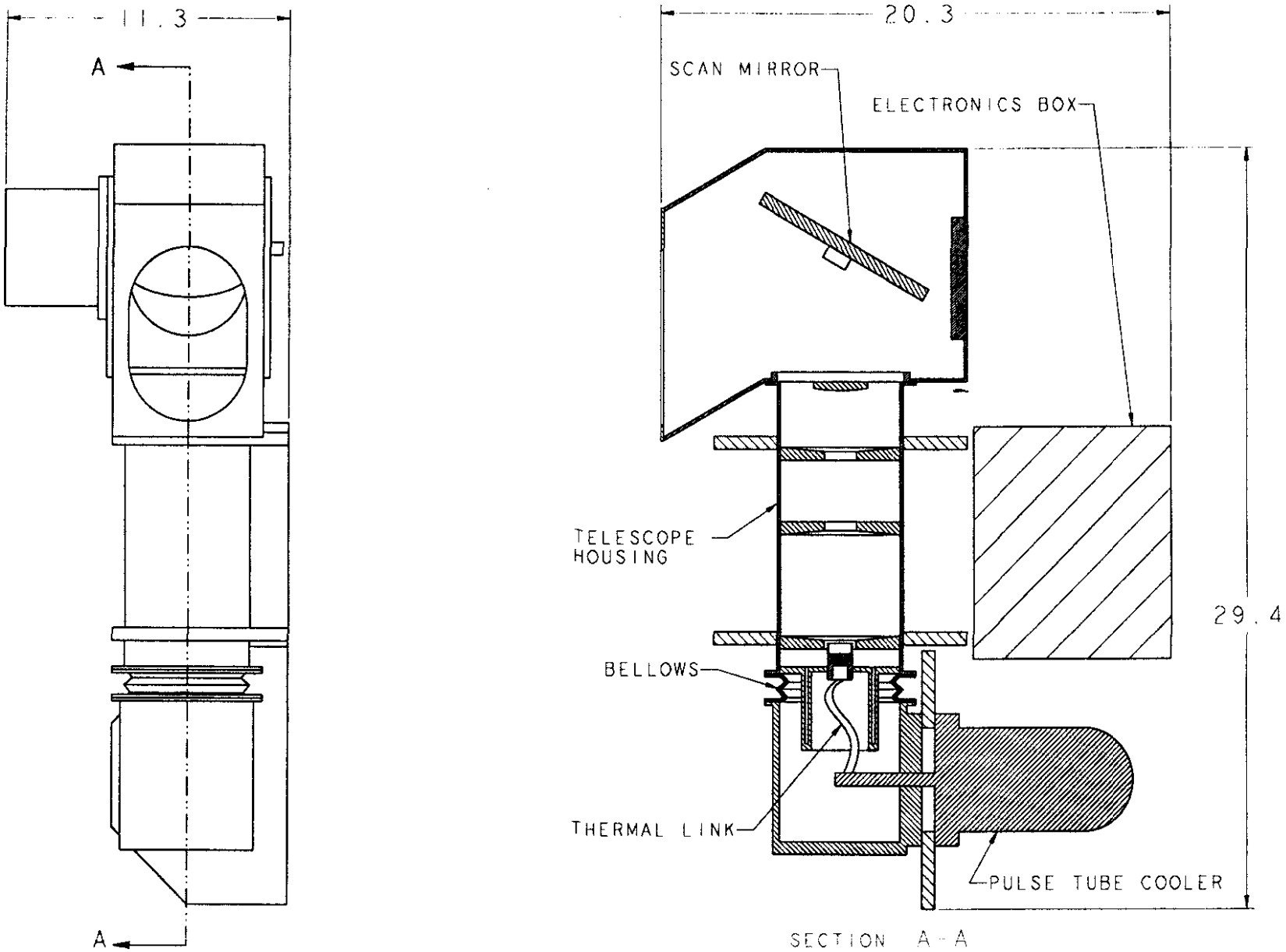

SABER NPOESS SIDE MOUNT

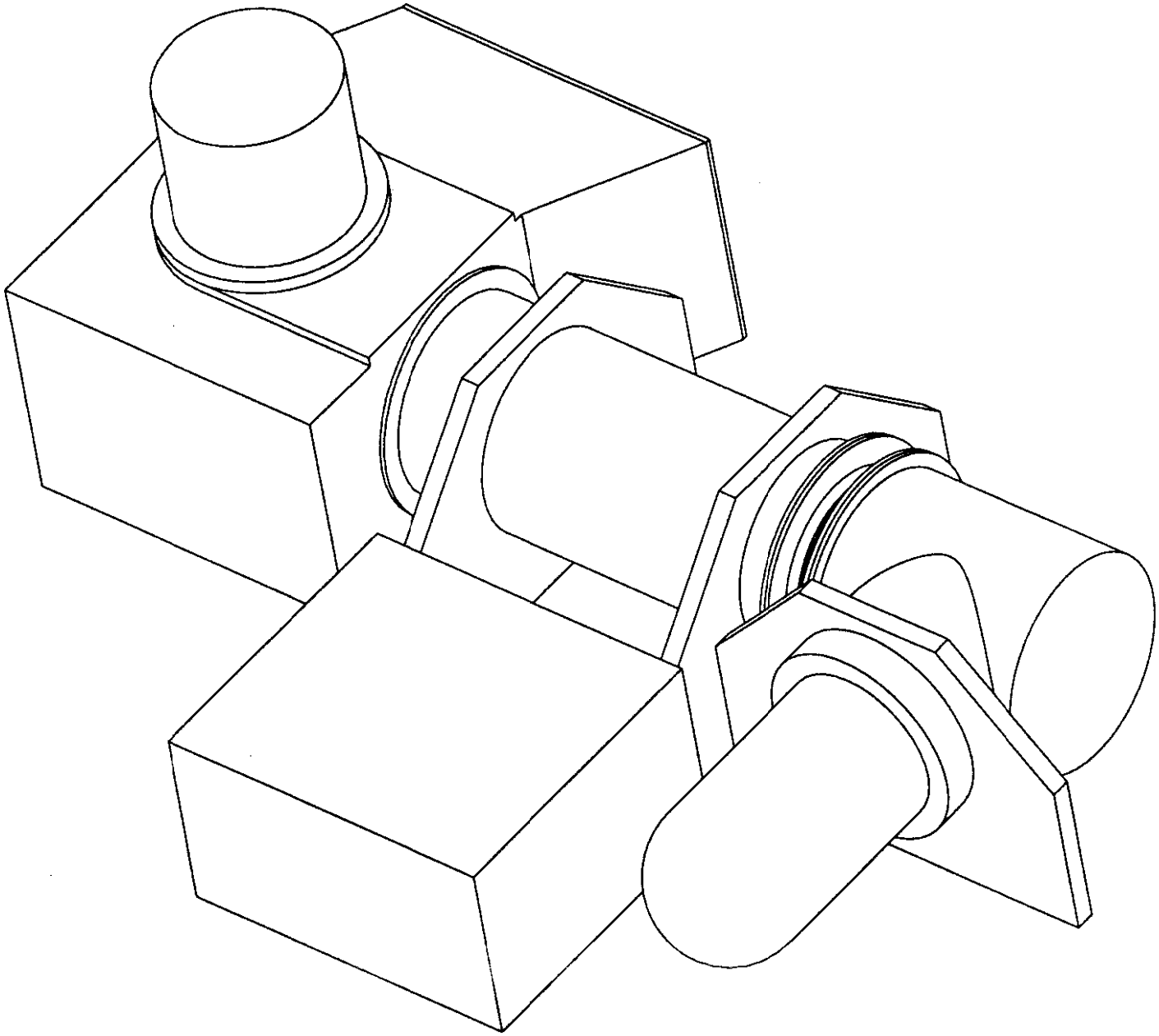

SABER NPOESS SIDE MOUNT

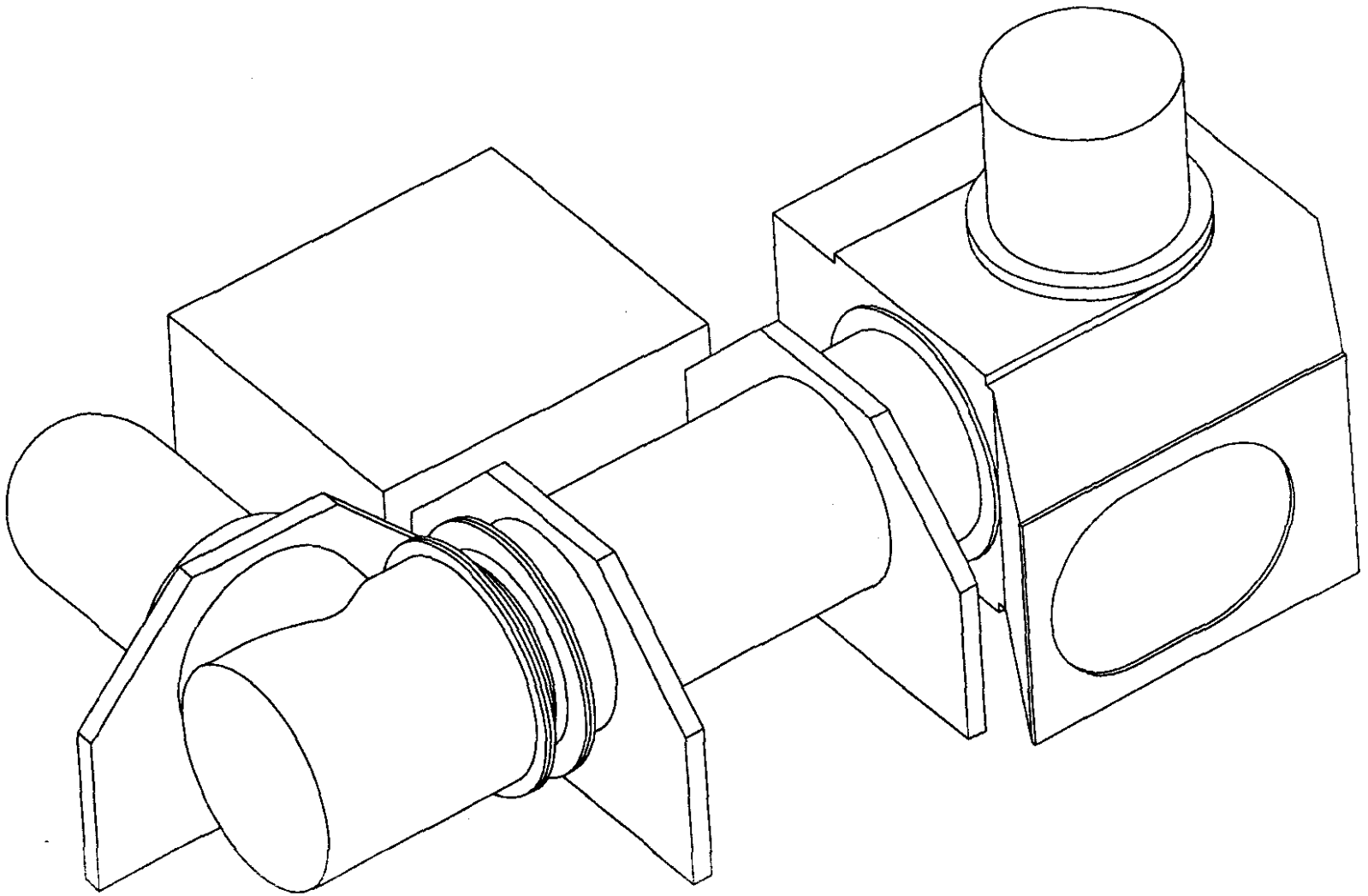

SABER NPOESS SIDE MOUNT

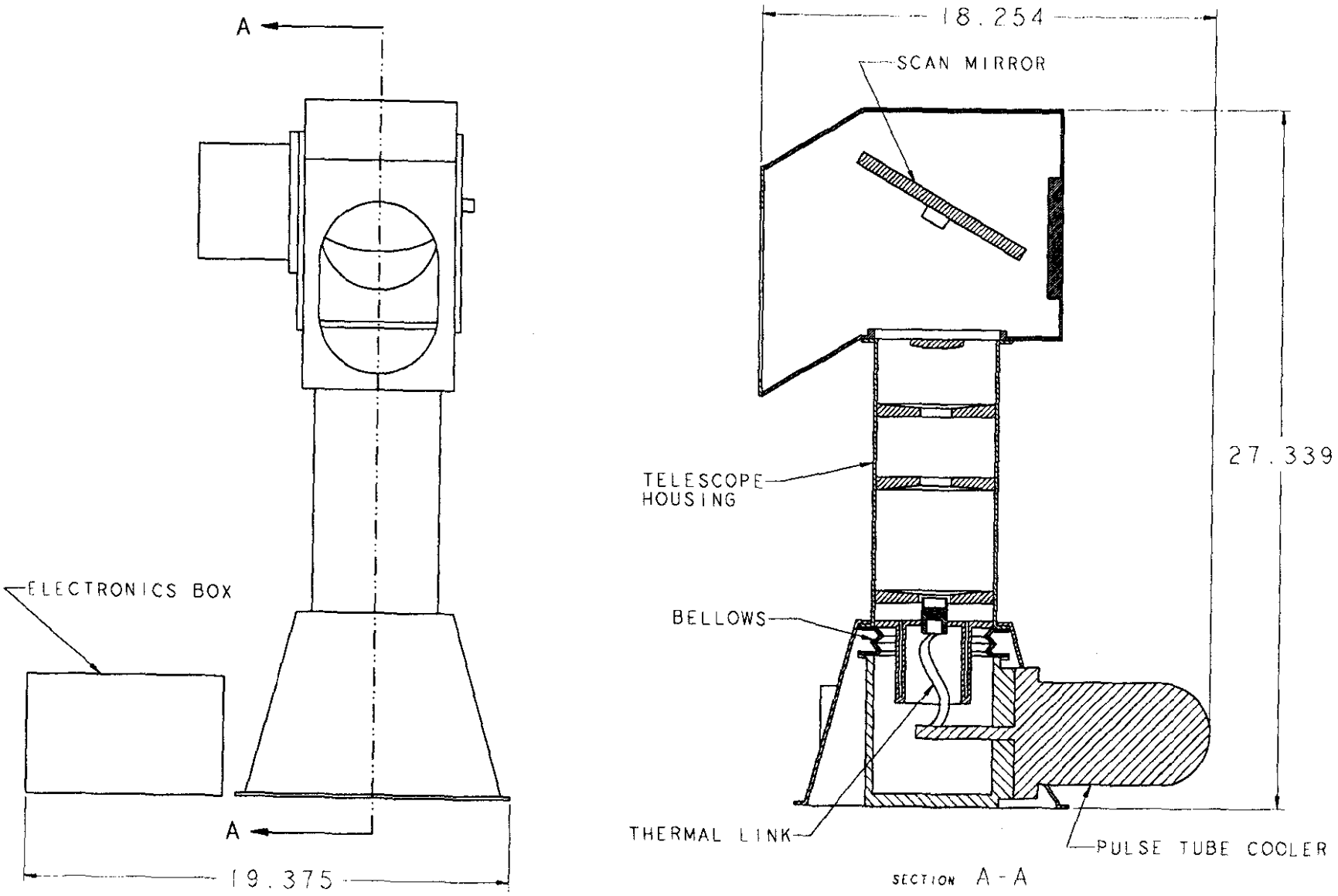

SABER NPOESS TOP MOUNT

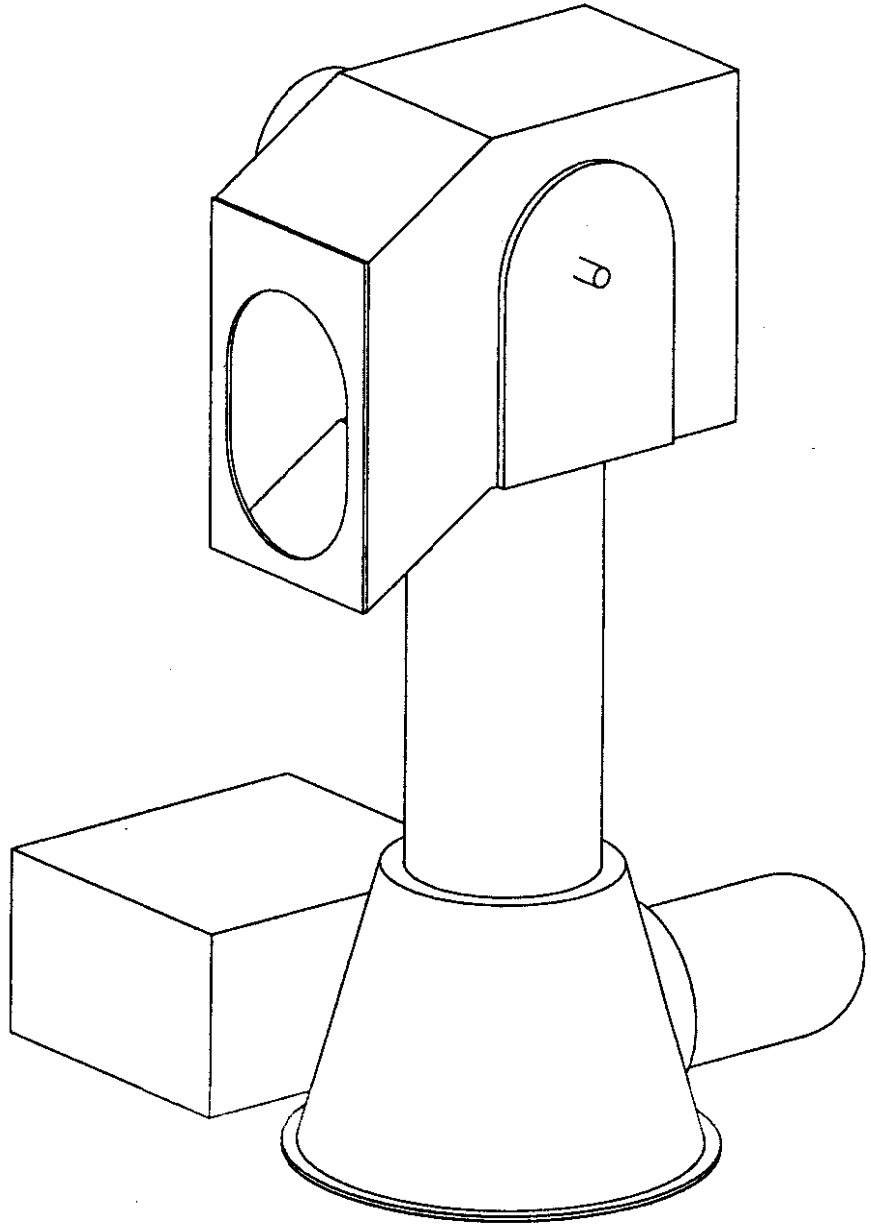

SABER NPOESS TOP MOUNT

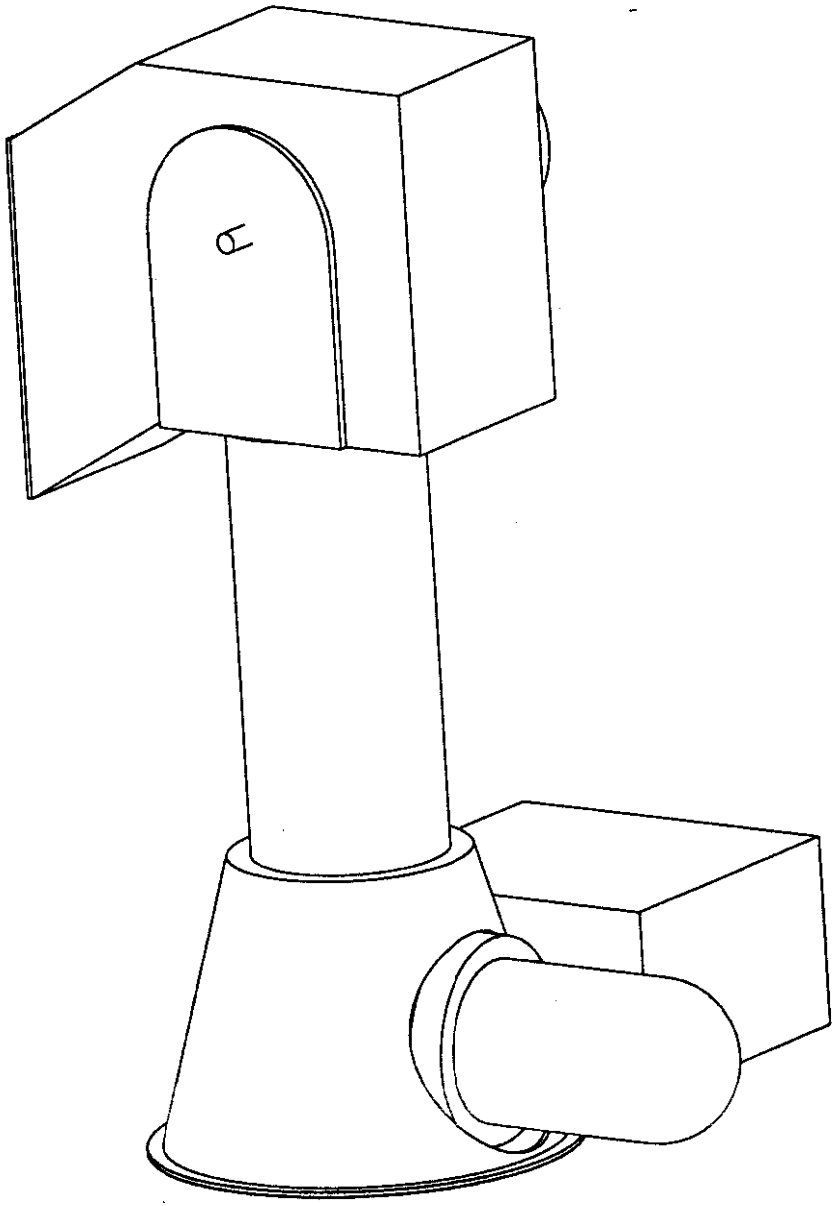

SABER NPOESS TOP MOUNT

SABER-NPOESS Proposed 1997 Activities

I. Undertake study of spatial (horizontal) and temporal sampling

At issue is the appropriate way to correctly increase spatial resolution over that provided by a single limb-scanning instrument

Three "options":

Traditional limb scanner

Azimuth-scanning limb scanner

Multiple (2) traditional scanners

We will apply asynoptic sampling theory to compare spatial resolution obtainable by each of these options

Studies will be based on asynoptic sampling theory and on observations from the Upper Atmosphere Research Satellite

Our intent is to provide a recommendation to NPOESS as to the spatial resolution achievable so as to guide sensor suite configuration

SABER-NPOESS Proposed 1997 Activities

II. Complete instrument design:

Responsivity (NER)

Packaging

Electronics

Specify pointing and jitter requirements

III. Complete retrievals in all 10 spectral channels

(T, O_3, H_2O, CH_4, aerosol extinction)

Optimize spectral placement of each channel

Establish baseline operational retrieval algorithm approach

SABER (INFORMATIONAL BROCHURE)

Sounding of the Atmosphere using Broadband Emission Radiometry

Scientific Goal: To explore the mesosphere and lower thermosphere globally and achieve a major improvement in our understanding of the fundamental processes governing the energetics, chemistry, dynamics, and transport of the atmospheric region extending from 60 km to 180 km. SABER is one of four instruments on NASA's TIMED Mission.

Scientific Objectives:

- Study the mesosphere and lower thermosphere structure including its seasonal, latitudinal and temporal variations.

- Investigate the energetics and distribution of radiatively active species in the non-LTE environment to understand the relative importance of radiative, chemical, and dynamical sources and sinks of energy.

- Analyze the O_y and HO_y chemistry and its coupling with energetics and dynamics.

- Conduct studies of dynamics and transport and their role in the energy budget.

Key Experiment Features:

- Mathematical inversion of Earth limb emission vertical profiles measured by a multispectral radiometer operating in the near to mid-infrared over the range 1.27 μm to 17 μm (7865 cm^{-1} to 650 cm^{-1}) is the experiment approach.

- Capability to continuously sound the atmosphere both night and day is provided by limb emission sounding permitting diurnal change and polar night studies to be conducted with daily global coverage.

- Autonomous pressure and altitude registration and automatic correction for spacecraft motion effects are performed using two wide and one narrow band CO_2 channel centered in the 15 μm band.

- State-of-the-art mechanical cooling of the detector focal plane array is employed in order to achieve high radiometric sensitivity, operational flexibility, and long experiment life.

- Experiment builds on a rich spaceflight heritage of limb sounding beginning with the Nimbus-7 LIMS experiment and including SAMS, CIRRIS, ATMOS, HALOE, CLAES, ISAMS, and SME. The instrument design and experiment approach is based directly on the highly successful LIMS instrument and flight experience.

SABER Measurements and Applications

Parameter	Wavelength (μm)	Application	Altitude Range (km)
CO_2	14.9 & 15.2	T, density, IR cooling rates, P(Z), non-LTE	10 - 130
O_3	9.6	O_3 conc., cooling rates, solar heating, chemistry and dynamics studies	15 -100
$O_2(^1\Delta)$	1.27	O_3 conc.(day), inferred [O] at night, energy loss for solar heating efficiency	50 - 105
CO_2	4.3	CO_2 conc.; mesosphere solar heating; tracer	85 -150
OH (υ)	2.0 & 1.6	HO_y chem., chemical heat source, dynamics, inference of [O] and [H], PMC studies	80 - 100
NO	5.3	Thermosphere cooling, NO_x chemistry	90 - 180
H_2O	6.9	HO_x source gas, dynamical tracer	15 - 80