M-32-11
M-32-12
GSFC
CONTRACTOR
LIBRARY

Advanced Ozone Profiler Using Limb Scattering

- need to know the altitude at which ozone changes occur
  SAGE II appears to show max change below 20 km
- need to measure tropospheric ozone (combine with an advanced TOMS instrument)
- need global coverage on a daily basis

Instruments:

Manifested on STS-87 October 1997

- SOLSE - Shuttle Ozone Limb Sounder
  Czerny-Turner imaging spectrometer
  1024x1024 SITE UV enhanced CCD array detector
  vertical coverage 25 - 60 km at < 2 km resolution
  spectral coverage 260-350 nm at ~0.5 nm resolution
- LORE - Limb Ozone Retrieval Experiment
  multi-filter instrument (IAD filters)
  345nm, 525nm, 600nm, 675nm, 1000nm
  (single wavelength RSAS flown on SSBUV 8)

Proposed under ESSP March 2000

- STILE - Stratospheric Imaging Limb Experiment
  wide field of view radiometer (1400 km swath)
  8 wavelengths (IAD filters) 320 nm - 1000 nm
  measure aerosols and tropospheric ozone

R. Pl Peters @ GSFC
CONTRACTOR
LIBRARY

Average Ozone Profiles at Mauna Loa

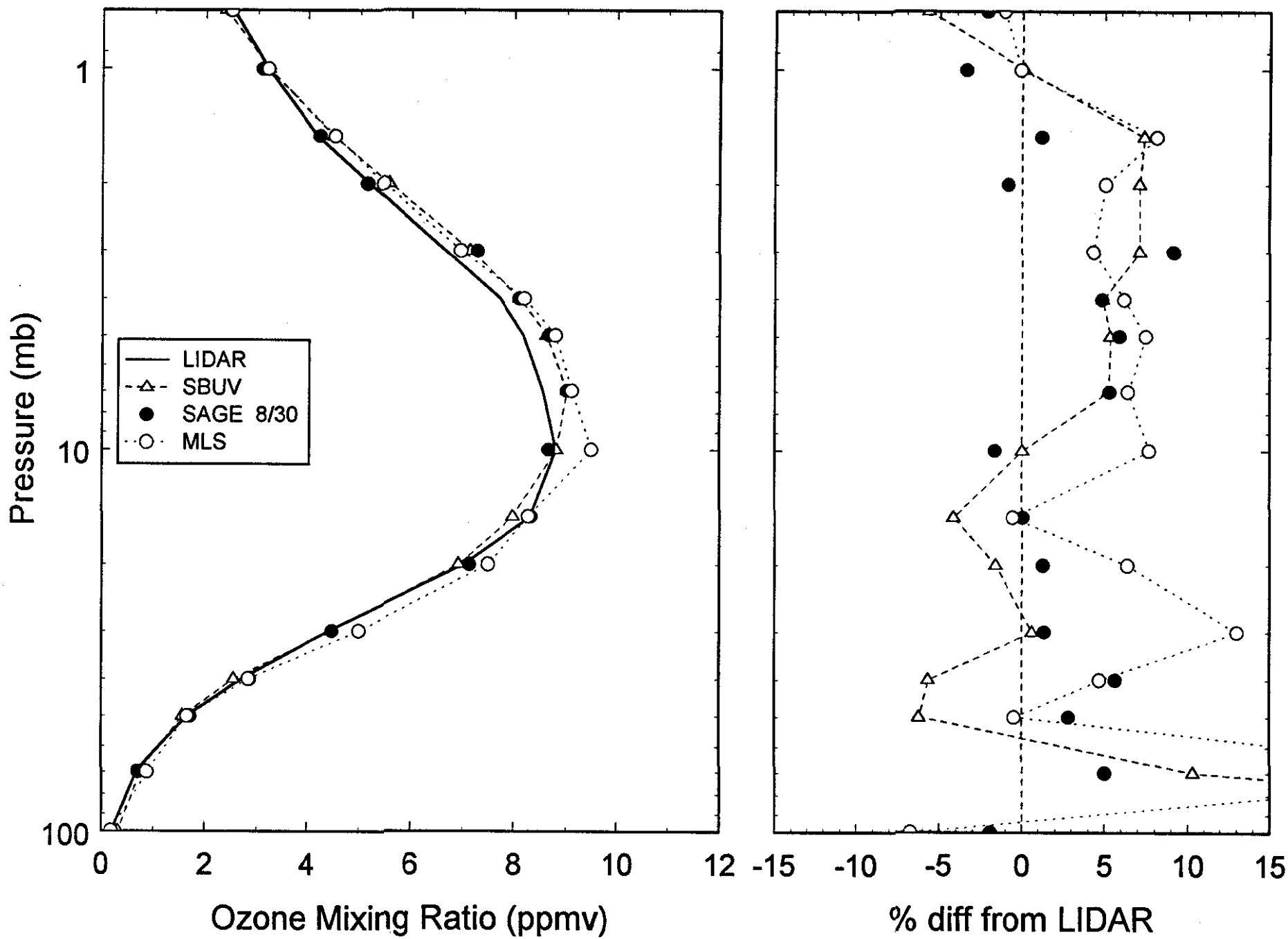

SOLSE / LORE SHUTTLE PAYLOAD
(Late 1997 Flight)

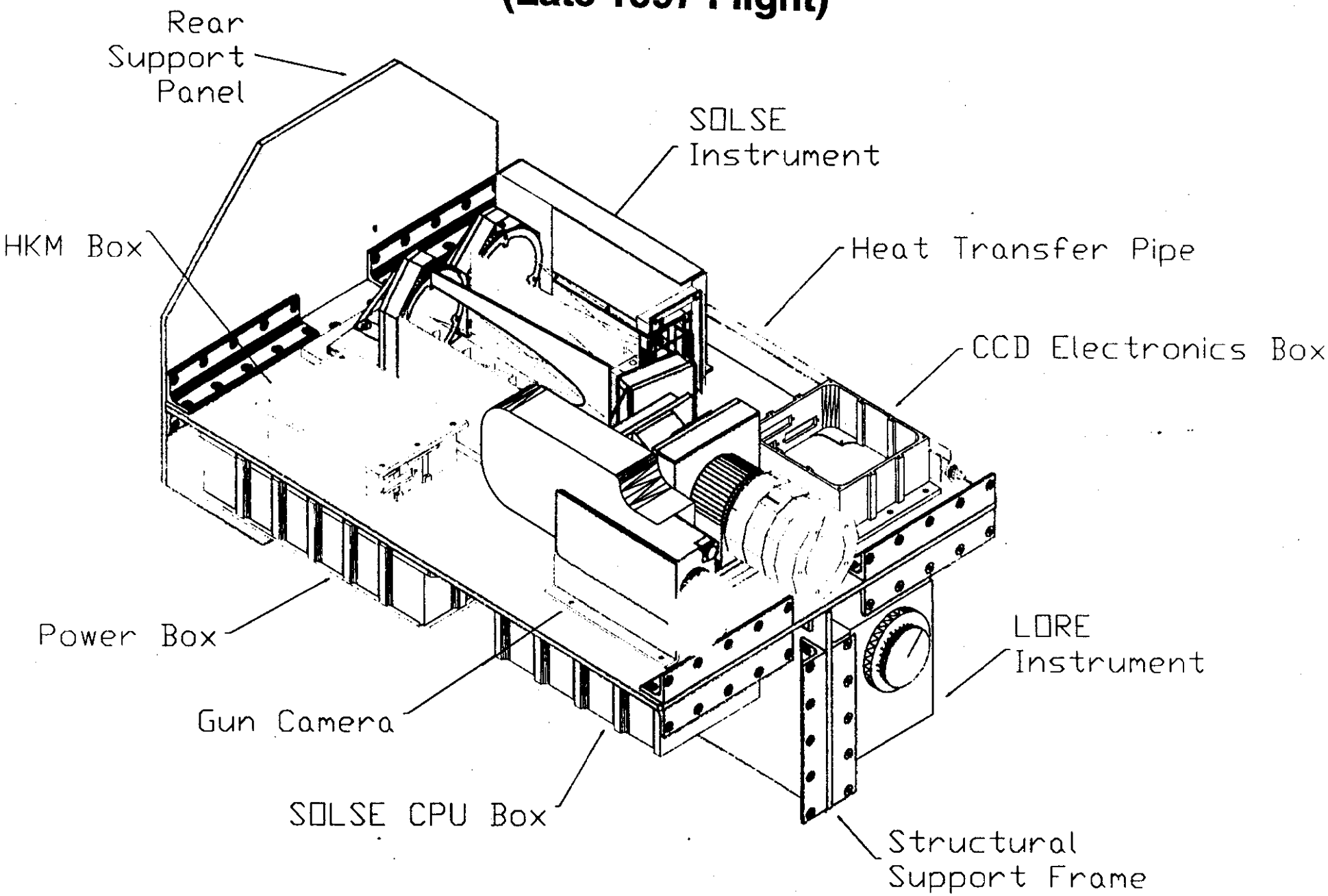

SOLSE Optical Design Concept

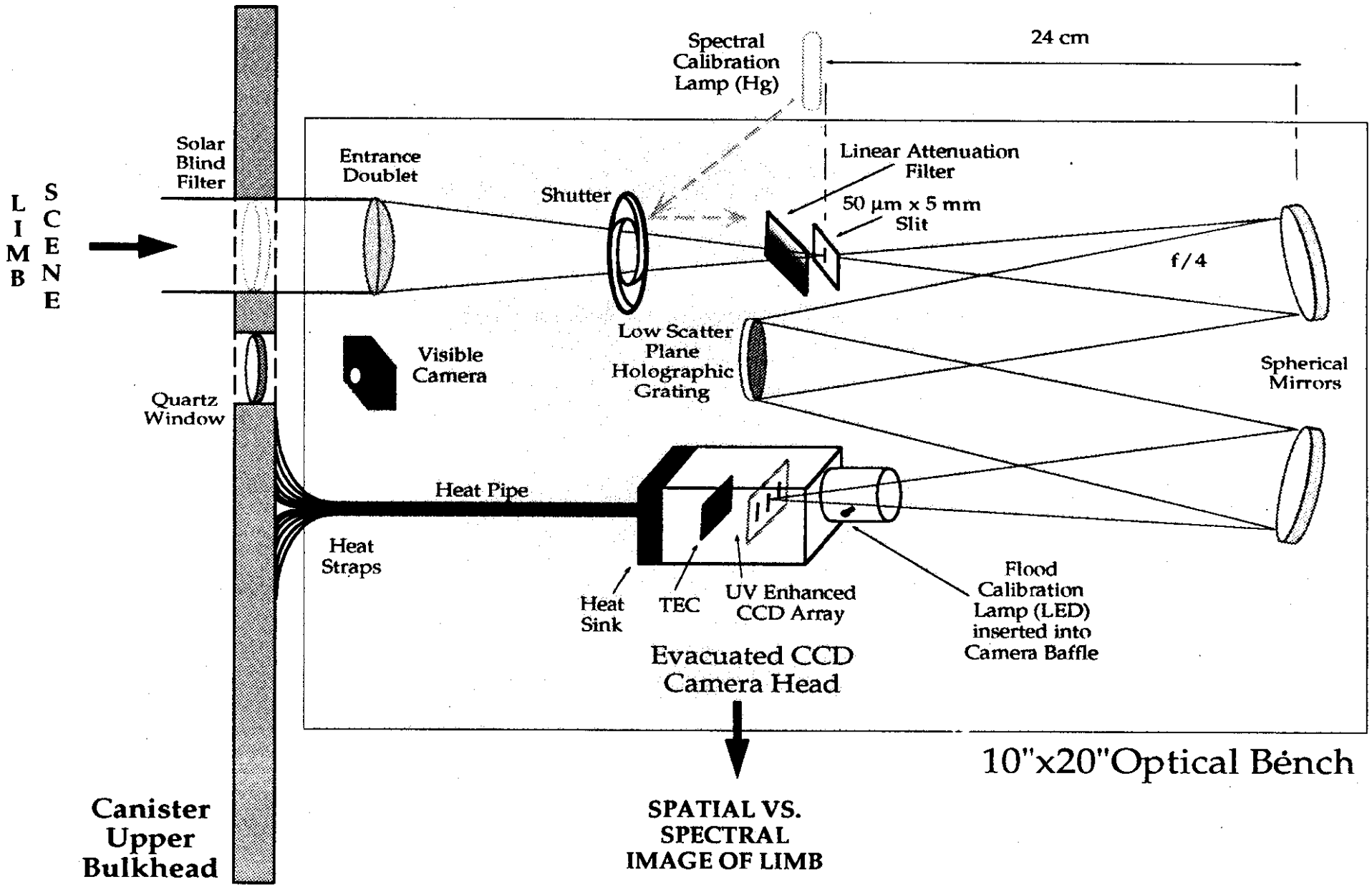

LIMB OZONE RETRIEVAL EXPERIMENT (LORE)

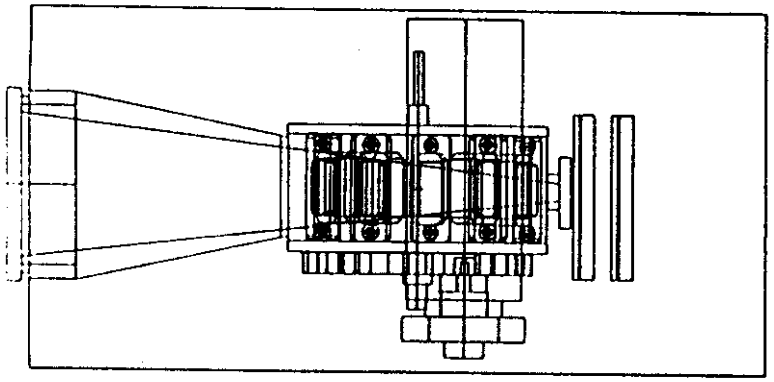

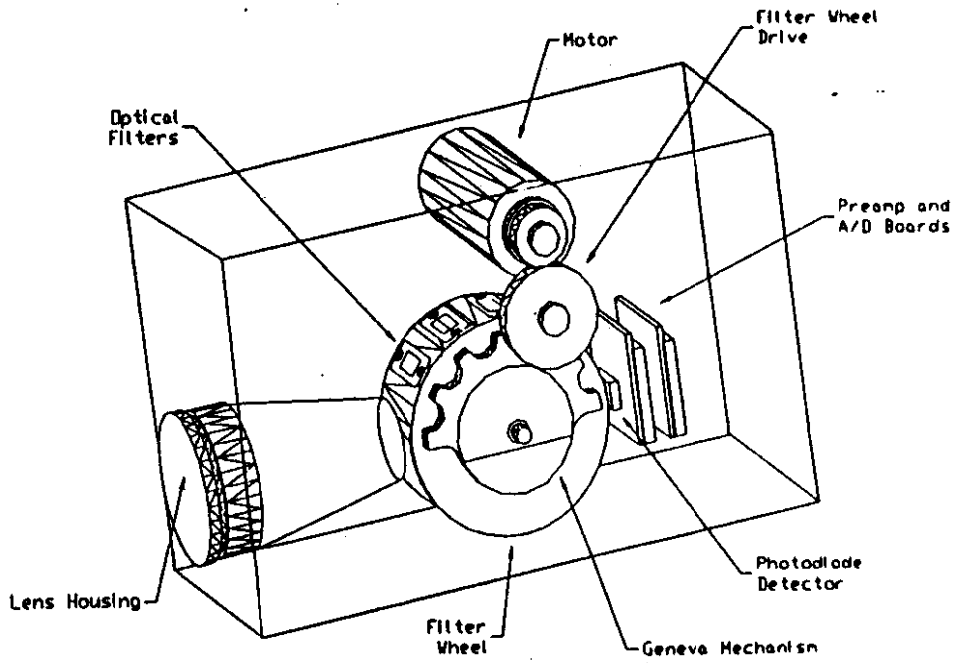

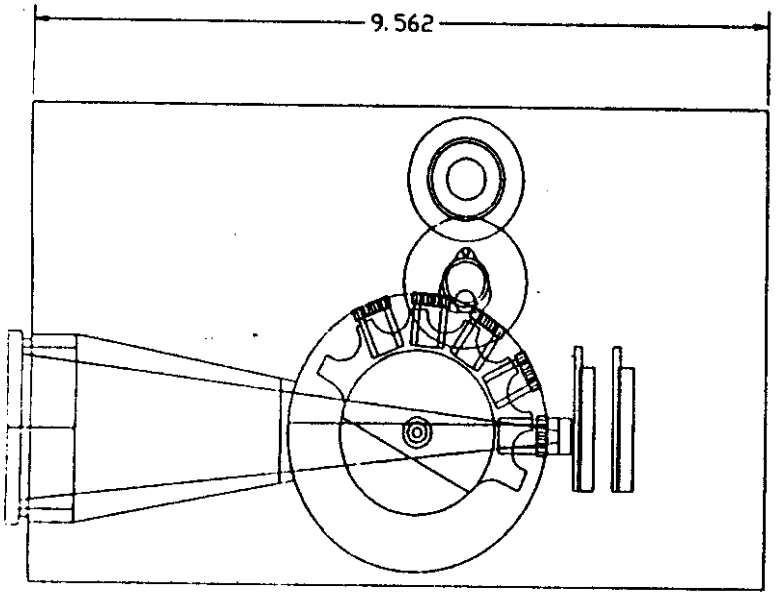

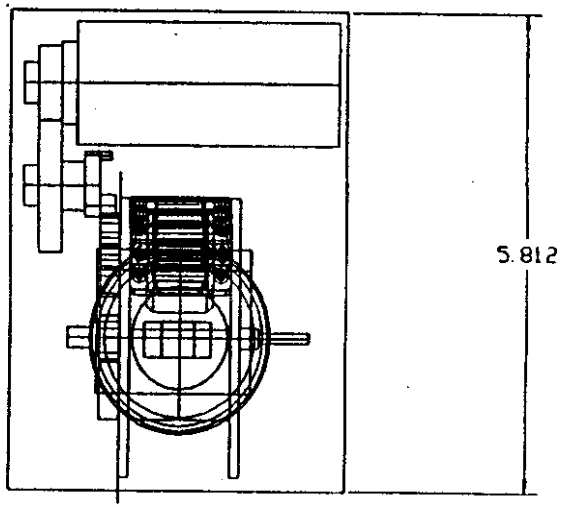

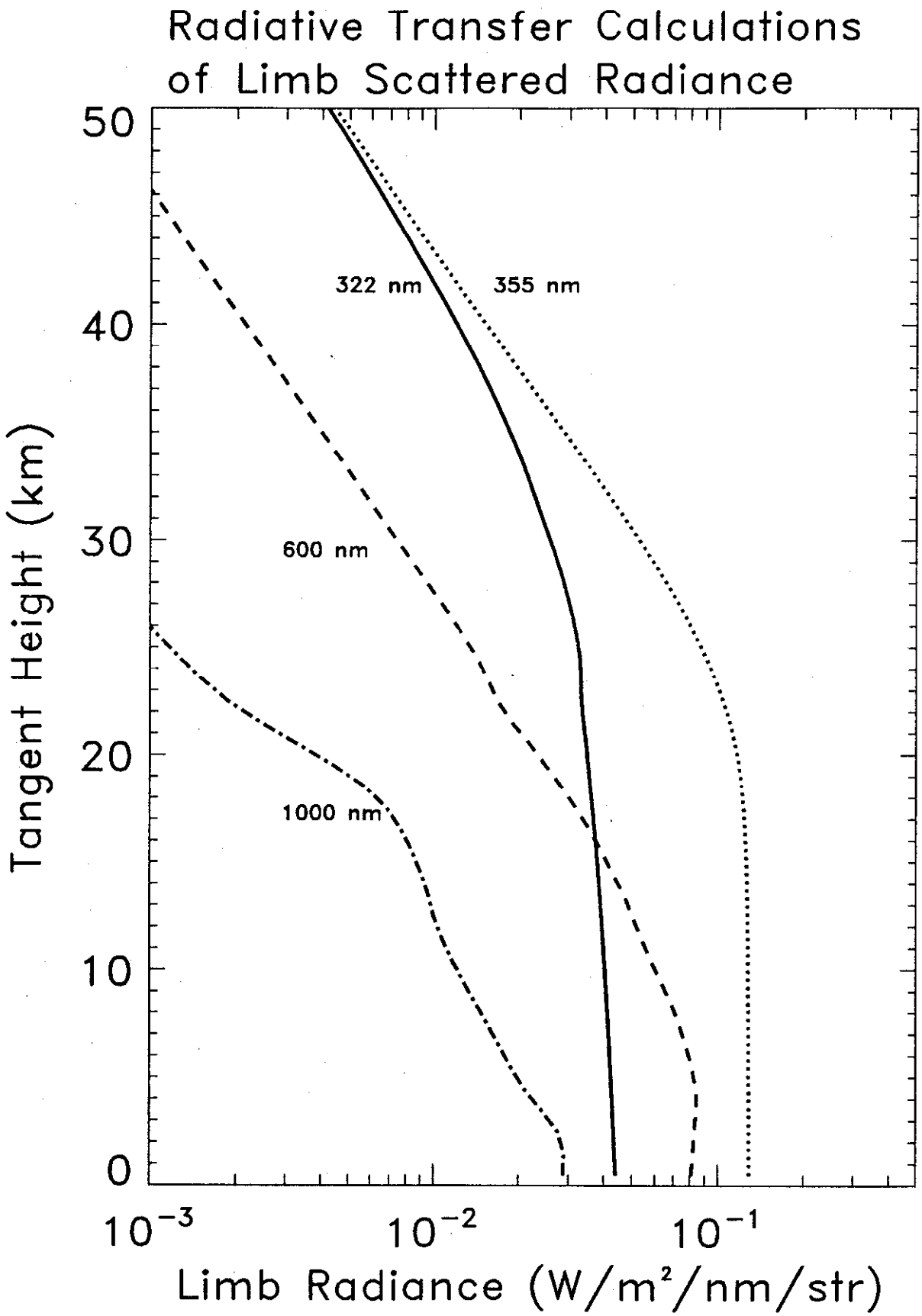

D. Flittner @ Aerozon

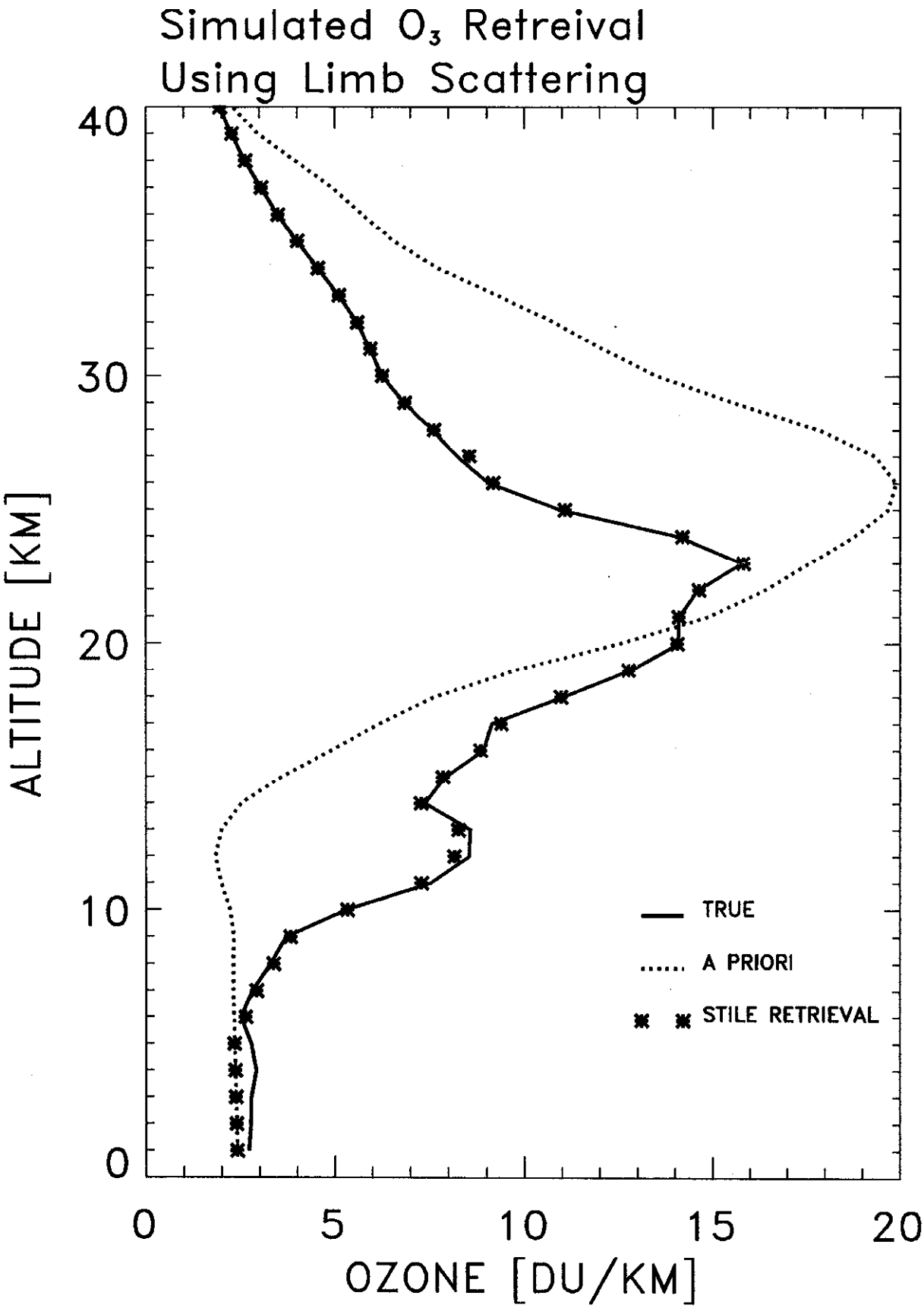
Simulated O_3 Retreival
Using Limb Scattering
ALTITUDE [KM]
OZONE [DU/KM]
0
10
20
30
40
0
5
10
15
20
TRUE
A PRIORI
STILE RETRIEVAL

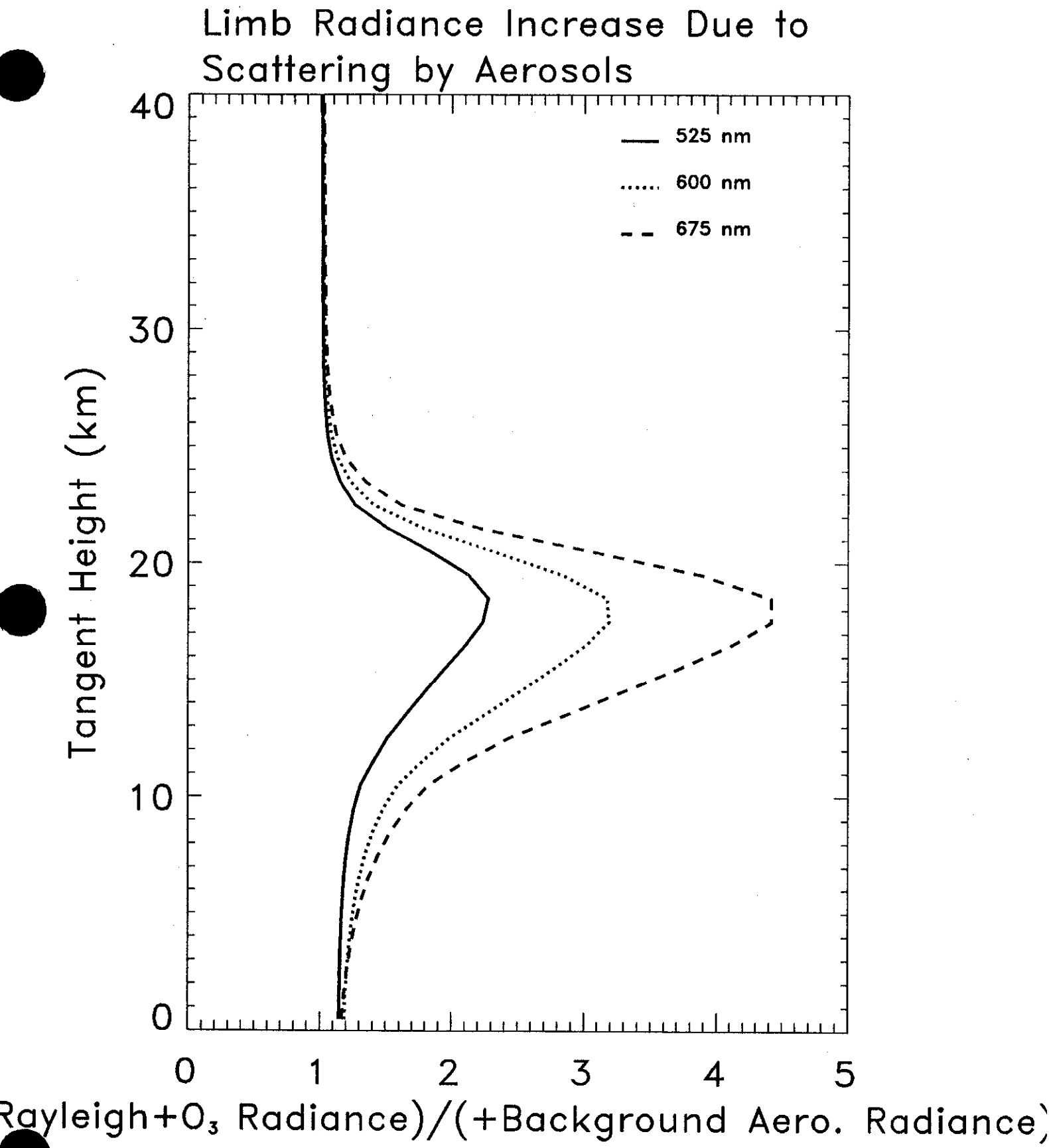
Limb Radiance Increase Due to
Scattering by Aerosols
525 nm
600 nm
675 nm
Tangent Height (km)
40
30
20
10
0
0
1
2
3
4
5
Rayleigh+O₃ Radiance)/(+Background Aero. Radiance)

Chappuis Pair Has A Small Sensitivity to Aerosols

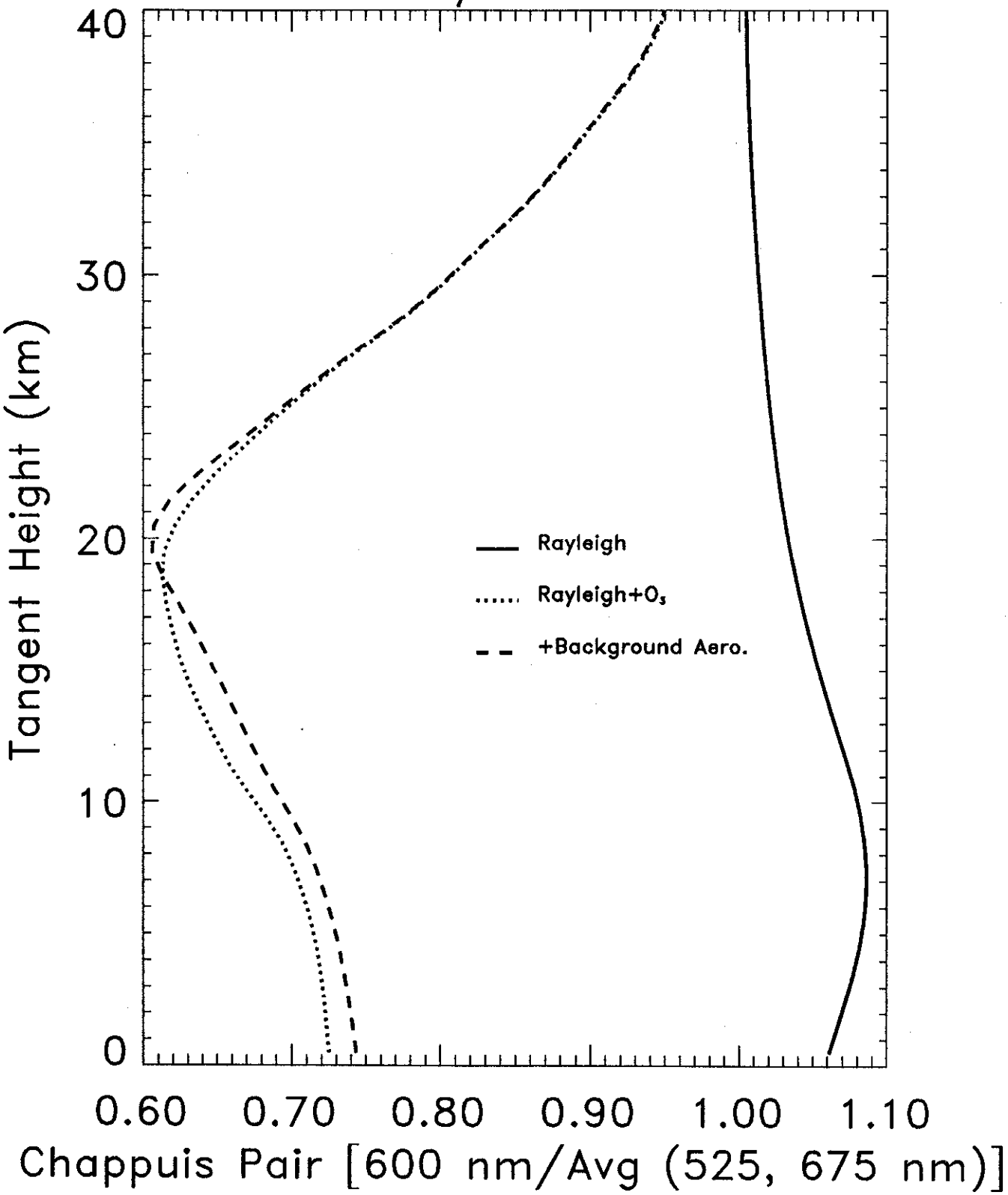

FY 96 Accomplishments
NPOESS Ozone Mapping and Profiler System
IR Limb Emission, Solar Occulatation, Limb Scattering

- Solar Occultation and Limb Scattering
  - Limb scattering modeling is underway with cooperation between LaRC, GSFC, &U. of Arizona. Model includes a realistic atmosphere (clouds, aerosols, surface albedo, and gas constituents)
  - SAGE III end to end radiometric model is operational. Results indicate that SAGE III in a Limb scattering mode can observe aerosols, clouds, and stratospheric ozone without modification.
  - A miniature solar occultation sensor (GAMUT) is under development and is being tailored to include NPOESS EDR measurement requirements. This potentially includes limb scattering and a wider wavelength coverage (430 to 1030nm) to enable measurements of the Climate Monitoring EDRs.
  - Next generation CCD detector is in fabrication at GSFC. Detectors should be completed by end of Nov. 96.
  - Advanced pointing system using piezoelectric motors has been designed and built. Allows for a 10 x reduction in power and reduced size and mass

• J. Zawadny/@LaRC

SAGE III Science Performance

Wavelength (nm)	Species Primary, Secondary	Altitude (Km)	Error (%)
315	O_3	30-50	TBD
385	A, r	15-55	TBD
430-450	NO_2	20-40	TBD
525	A	10-35	TBD
553-623	O_3	10-40	TBD
620-640	O_2	10-30	TBD
675	A	10-35	TBD
757	A	10-35	TBD
759-771	O_2, r	10-30	TBD
872	A	10-30	TBD
1020	A	0-30	TBD

Errors are Random Component
Altitudes may be limited by clouds

A = aerosol
r = Atmospheric Density

NASA Langley

Operational Scenario

- 65 Science channels
- Decrease elevation scan rate by half
- Utilize 1/16 second integration time
- Co-add 2 integrations (8Hz sampling rate)
- Scan 0 to 75 km in 10 seconds
- Operate for approximately 42 minutes per orbit
- Cover approximately 140 degrees of latitude
- Data volume equals a 4 minute lunar occultation
- Take data in absence of lunar events

SAGE III INSTRUMENT

Overall METEOR 3M/SAGE III Characteristics

Total Channel	290 to 1550 nm
Spectral Composition	12 Spectral Channels
Vertical Resolution	1 to 2 km
Field Of View (FOV)	± 180° Azimuth
Detector FOV	± 0.5 km vertical
Pointing Control	± 1°
Pointing Stability	0.005°/sec
S/C Mounting Alignment / Knowledge	± 0.25° / ± 0.05°
Data Rate	99.3 Kilobits/sec (for 8 min., 3 events/orbit)
Mass	80 kg
Power	80 W (orbit average)
Dimensions	Sensor Assembly -- 34.3 cm dia. x 73.7 cm Electronics-- 25 x 25 x 42 cm

SAGE III INSTRUMENT

APPROACH

2-axis gimbal points spectrometer toward Sun during sunrise and sunset and toward moon during moonrise and moonset

OPTICAL DESIGN:
F/4 system with CCD detector

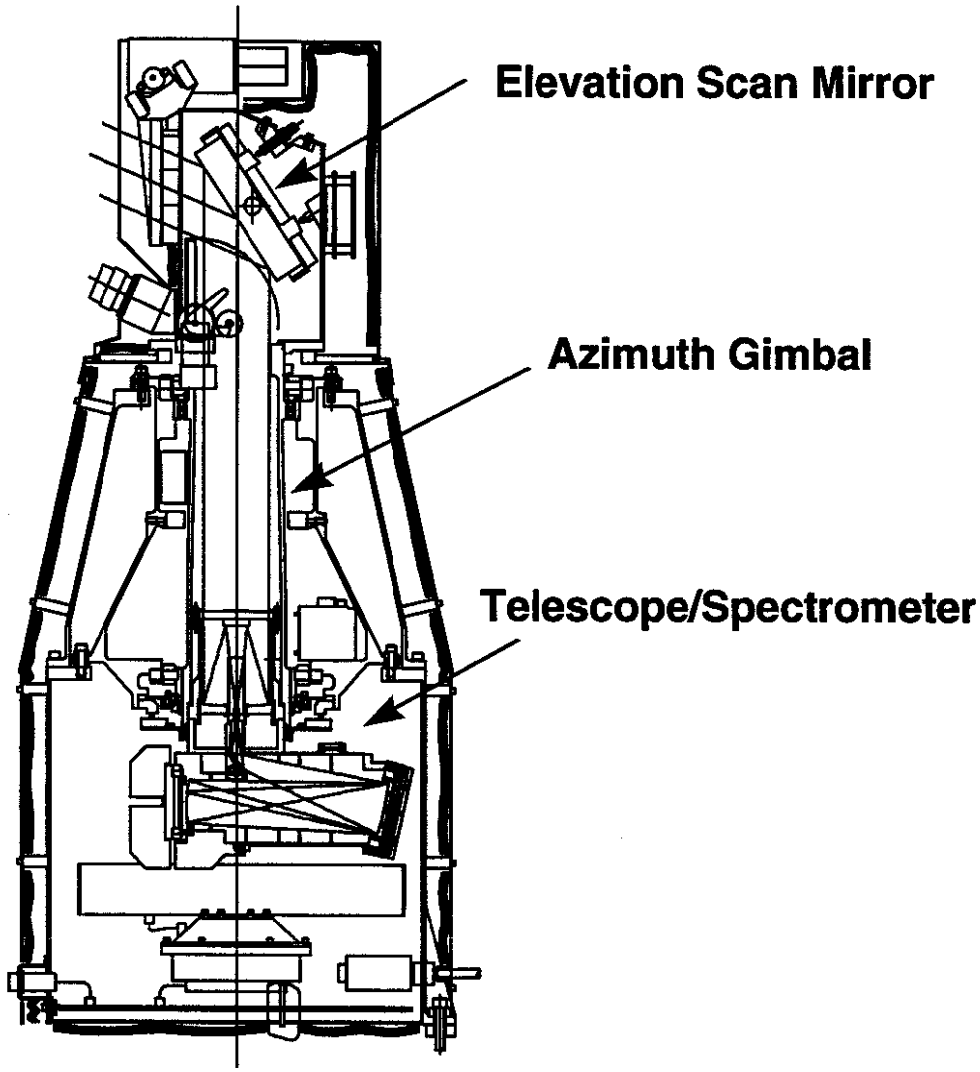

SAGE III INSTRUMENT

Telescope/Spectrometer

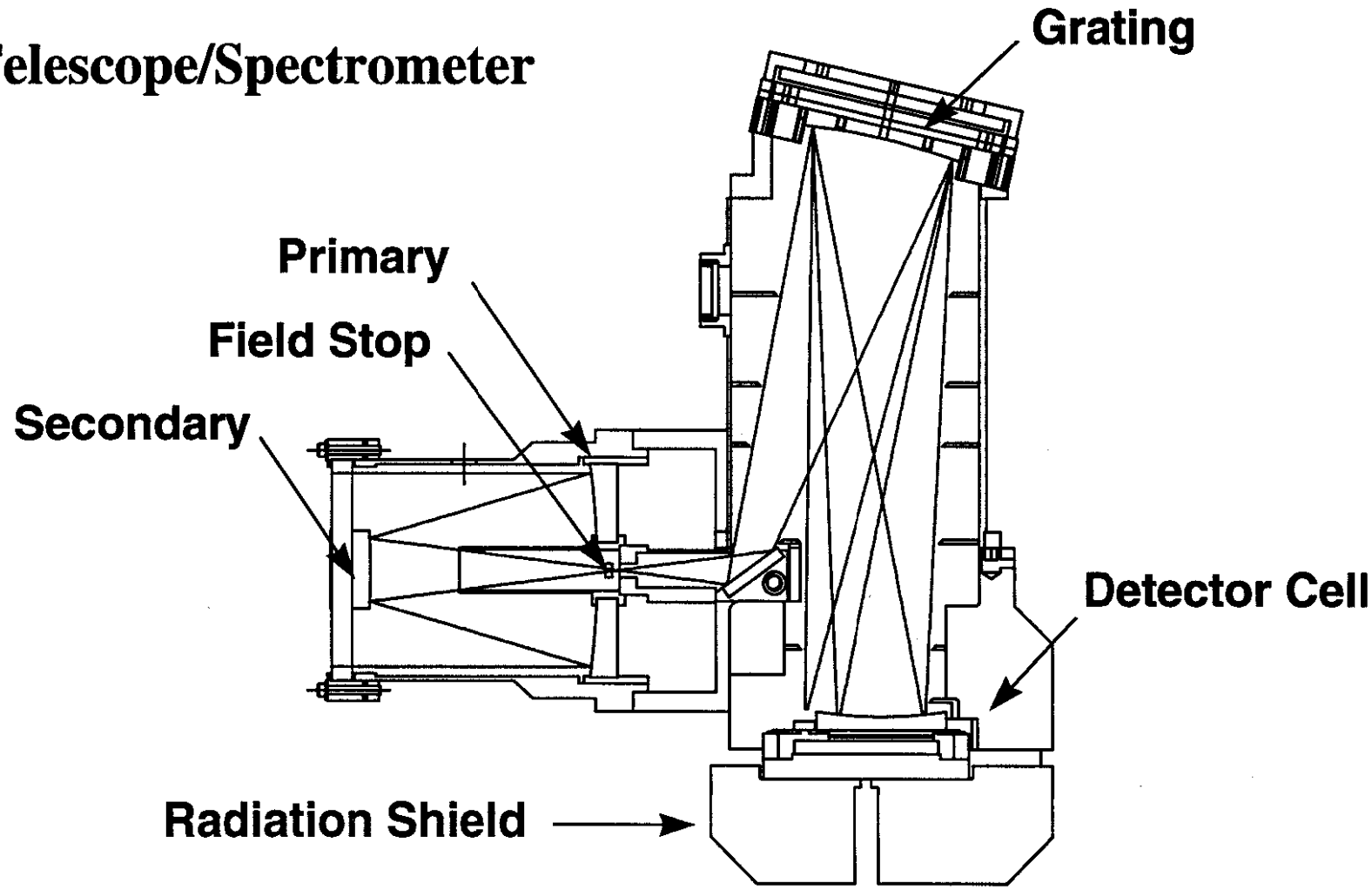

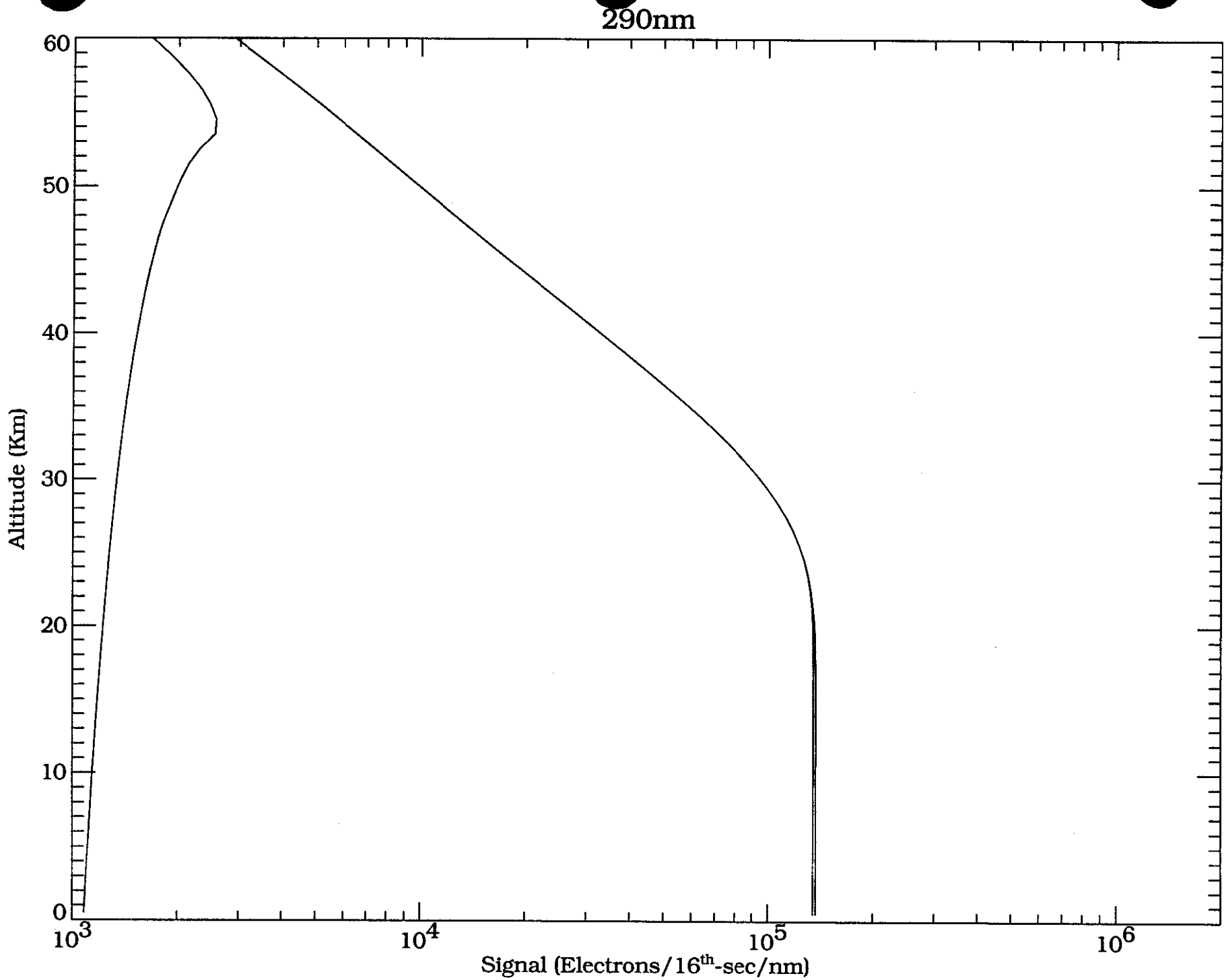
290nm
Altitude (Km)
60
50
40
30
20
10
0
10^3
10^4
10^5
10^6
Signal (Electrons/16th-sec/nm)

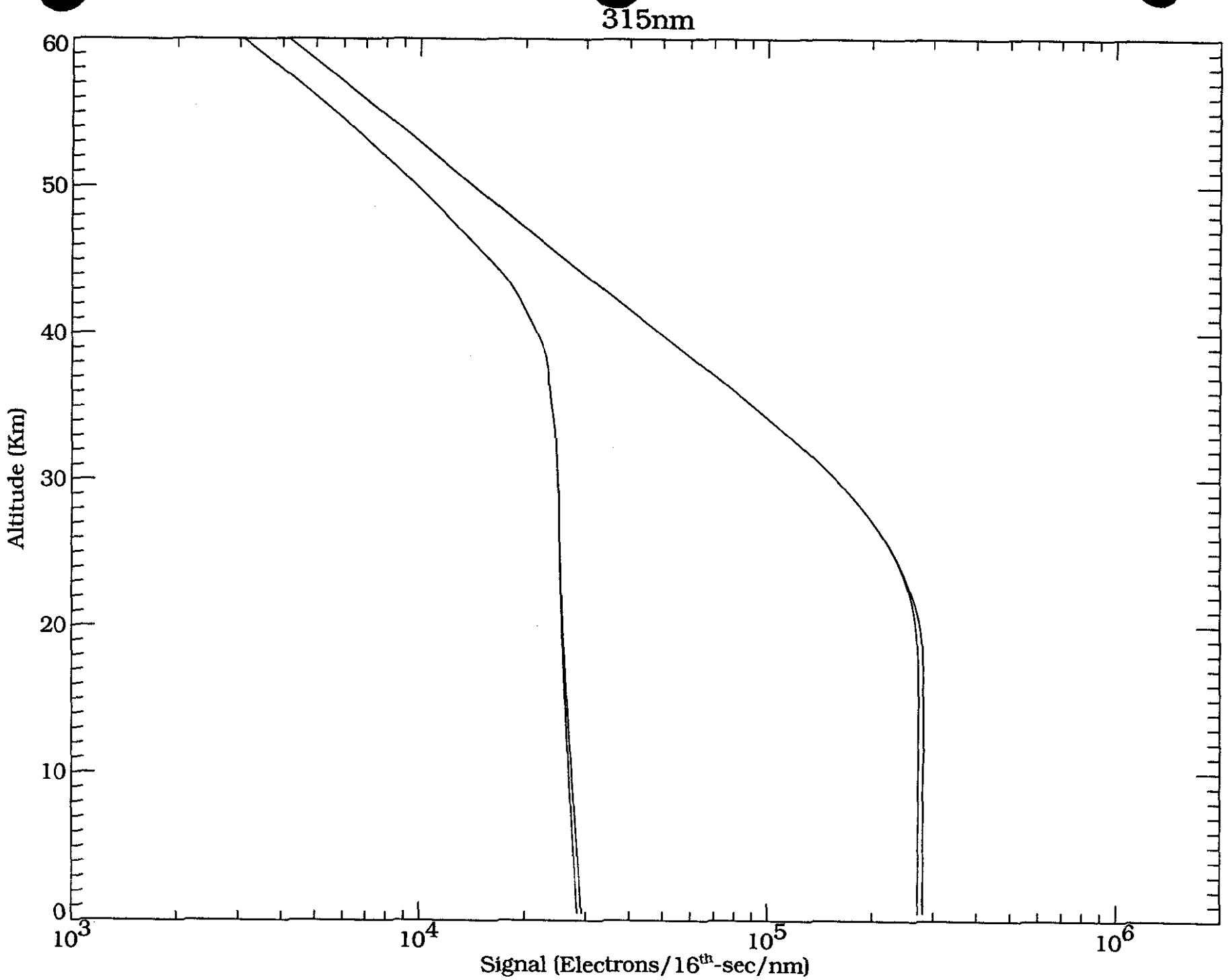
315nm
60
50
40
30
20
10
0
Altitude (Km)
10^3
10^4
10^5
10^6
Signal (Electrons/16th-sec/nm)

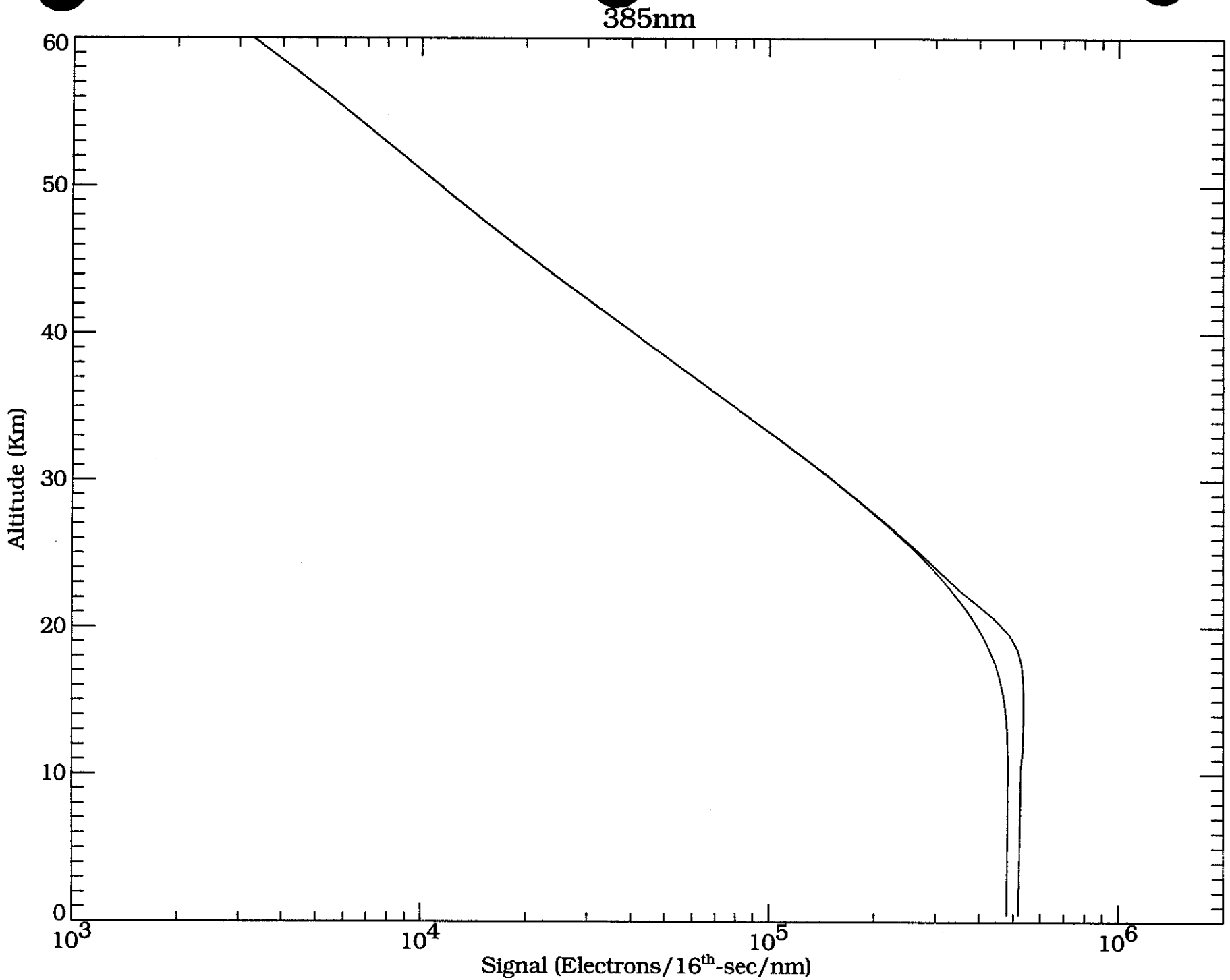
385nm
Altitude (Km)
60
50
40
30
20
10
0
10^3
10^4
10^5
10^6
Signal (Electrons/16th-sec/nm)

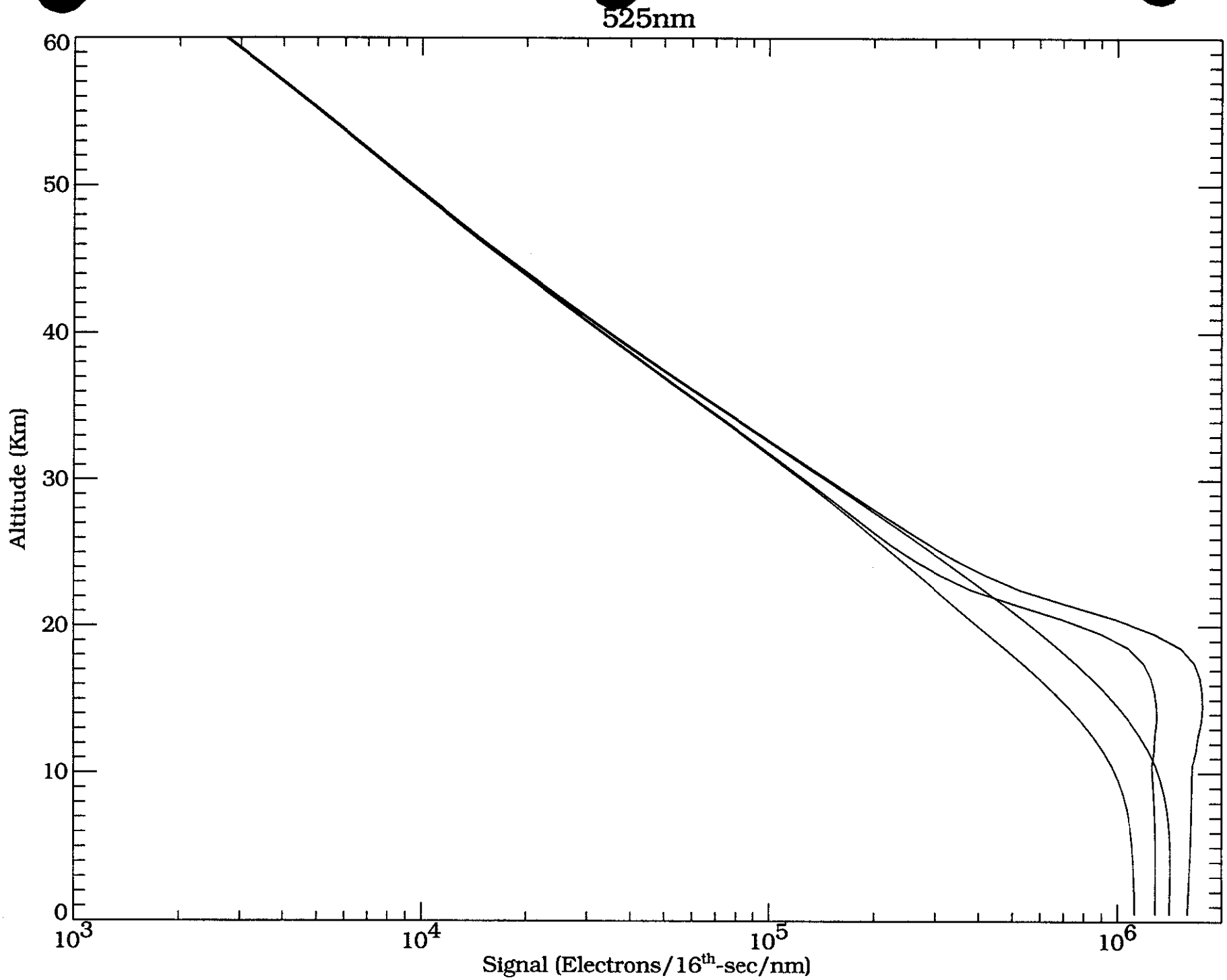
525nm
Altitude (Km)
60
50
40
30
20
10
0
10^3
10^4
10^5
10^6
Signal (Electrons/16th-sec/nm)

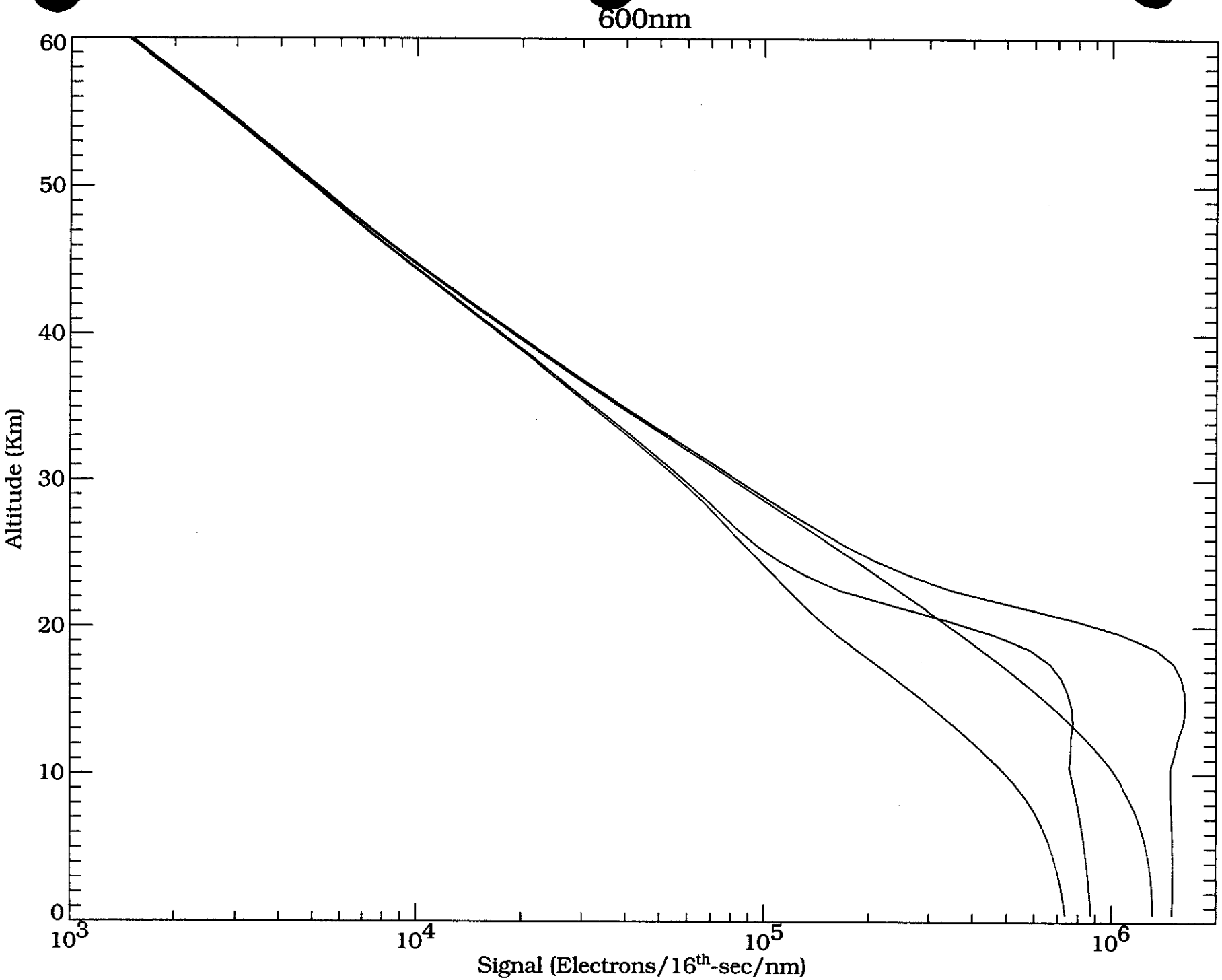
600nm
Altitude (Km)
60
50
40
30
20
10
0
10^3
10^4
10^5
10^6
Signal (Electrons/16th-sec/nm)

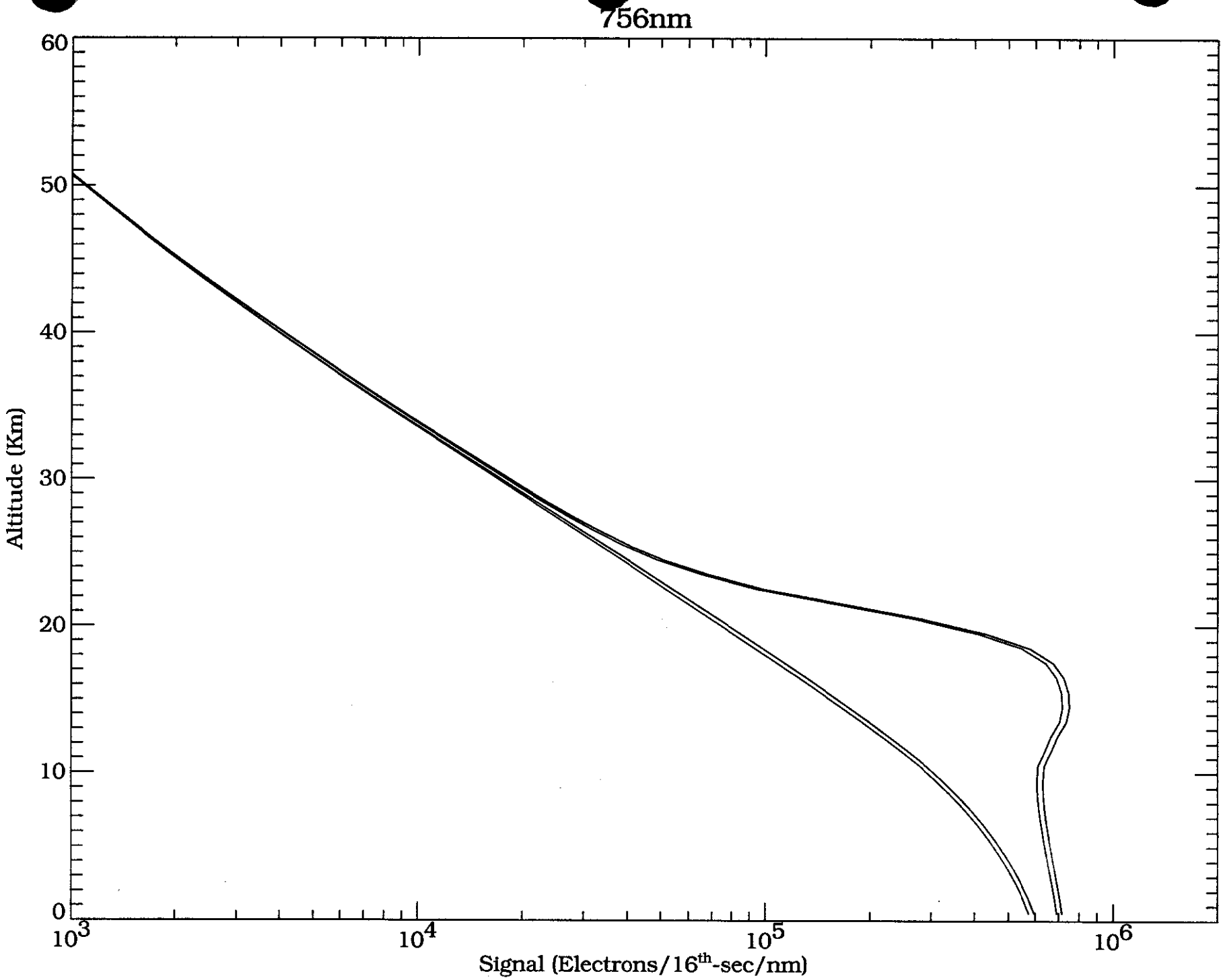
756nm
60
50
40
30
20
10
0
Altitude (Km)
10^3
10^4
10^5
10^6
Signal (Electrons/16th-sec/nm)

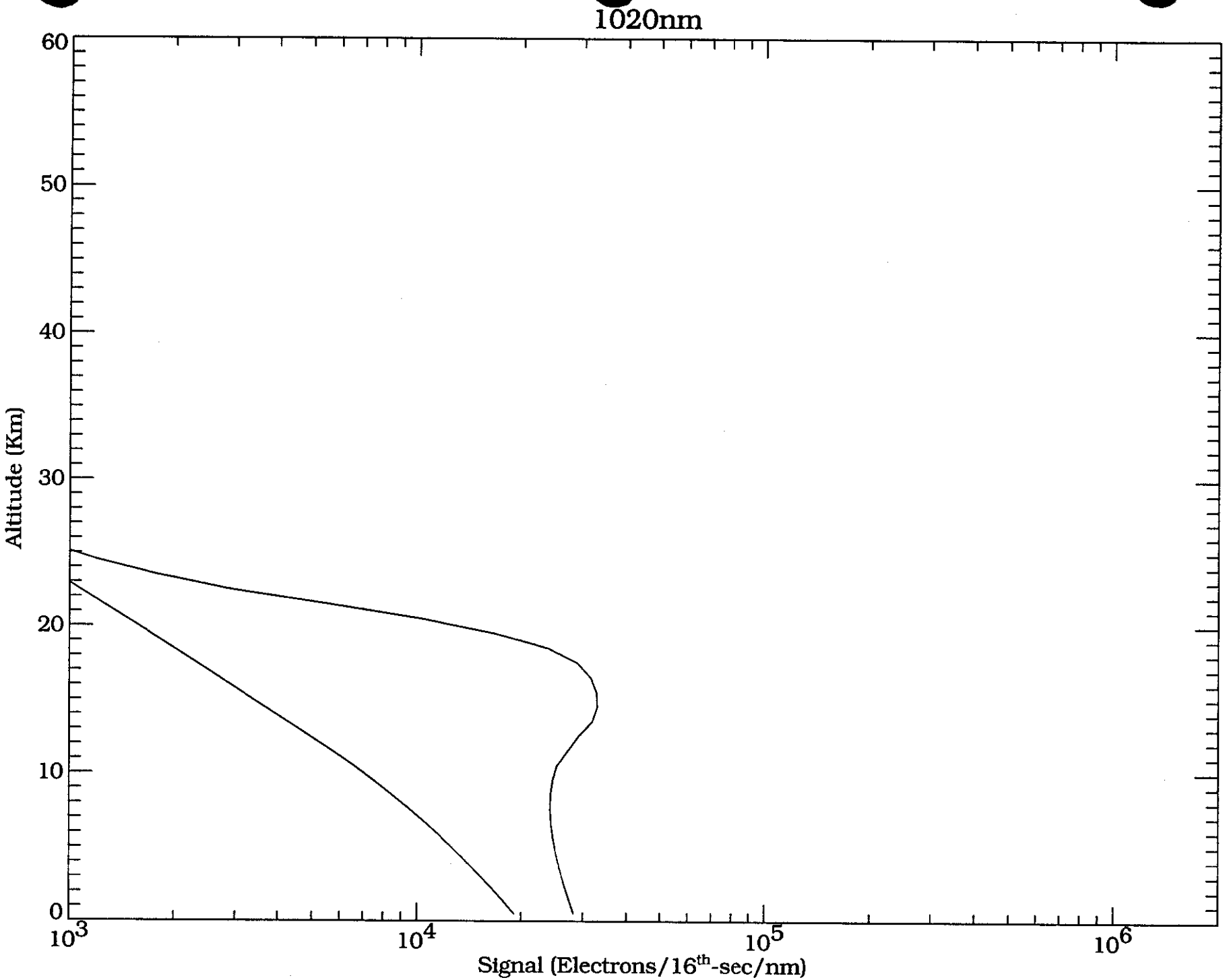
1020nm
60
50
40
30
20
10
0
Altitude (Km)
10^3
10^4
10^5
10^6
Signal (Electrons/16th-sec/nm)

FY 97 Plans
NPOESS Ozone Mapping and Profiler System
IR Limb Emission, Solar Occulatation, Limb Scattering

- IR Limb Emission
  - Complete radiative transfer studies, defining optimal spectral intervals for T, H_20, O_3, CH_4, and Aerosols
  - Complete instrument design
  - Initiate optimal spatial and temporal sampling for NPOESS requirements, including sampling from multiple platforms
- Solar Occultation and Limb Scattering
  - Measure the SAGE III telescope performance to ensure it can meet the required vertical and altitude resolution
  - Complete limb scattering retrievals
  - Develop a modified SAGE III instrument concept
  - Develop final detector assembly and measure performance
  - Begin life testing on advanced pointing system

ALGORITHM DEFINITION

- o TOMS ALGORITHM CHOOSES PROFILE TABLE BY LATITUDE.
- o PROFILE DETERMINED LARGELY BY AIR MASS - WHICH DOES NOT FOLLOW LATITUDE BOUNDARIES.
- o TOTAL OZONE MAPS SHOW SHARP GRADIENTS
- o HAVE SHOWN THAT THESE GRADIENTS CORRESPOND TO AIR MASS BOUNDARIES USING RAWINSONDE DATA
- o CHOICE OF CORRECT AIR MASS PROFILE HAS SIGNIFICANT EFFECT ON ACCURACY OF TOTAL OZONE AT HIGH SOLAR ZENITH ANGLES

• R. Hudson
@ Univ. of MD.

ALGORITHM DEFINITION

- o ALGORITHM WILL PROBABLY NOT USE LOOK-UP TABLE APPROACH. HOW DO WE MAXIMISE USE OF ALL WAVELENGTHS?

- o SHOULD MAKE USE OF AUXILLARY DATA FROM OTHER INSTRUMENTS:-
  - o CLOUD HEIGHT AND OPTICAL DEPTH
  - o CLOUD TYPE
  - o OZONE PROFILE
  - o AEROSOL DATA

- o WHAT ABOUT OTHER DATA PRODUCTS OBTAINED FROM TOMS DATA?
  - o TROPOSPHERIC COLUMN OZONE
  - o AEROSOLS
  - o VOLCANIC SULFUR DIOXIDE/AEROSOLS

- o PREPARING SIMULATED DATA FOR RETRIEVAL TESTS

UNIVERSITY OF MARYLAND

- o TASK 1
  - o STUDY PRESENT COMPLEMENT OF INSTRUMENTS
  - o CONSIDER TECHNOLOGICAL ADVANCES REQUIRED
  - o DEFINE INSTRUMENT REQUIREMENTS
- o TASK 2
  - o ALGORITHM DEFINITION