NPOESS/IPO
CAPT KANG

A High Performance GPS Radio Occultation Instrument

Magnus Bonnedal
Jacob Christensen
Saab Ericsson Space

Gothenburg
Sweden

CLEARED
FOR OPEN PUBLICATION

SEP 01 1999 21

DIRECTORATE FOR FREEDOM OF INFORMATION
AND SECURITY REVIEW
DEPARTMENT OF DEFENSE

Advanced Radio Technologies, Sep 8 - 10, 1999

Saab Ericsson Space
This is a
SAF/PAS document 99-5296

99--0757

Call 697-3222/697-8932
for pickup or return to 5D227

Radio Occultation

- Probing the atmosphere and ionosphere by measuring the L1 and L2 signals from raising and setting GPS S/C
- Determining the S/C position with high accuracy to extract the atmosphere/ionosphere impact
- Method developed by JPL and Stanford, for sounding of planetary atmospheres (Mariner, Pioneer and Voyager)

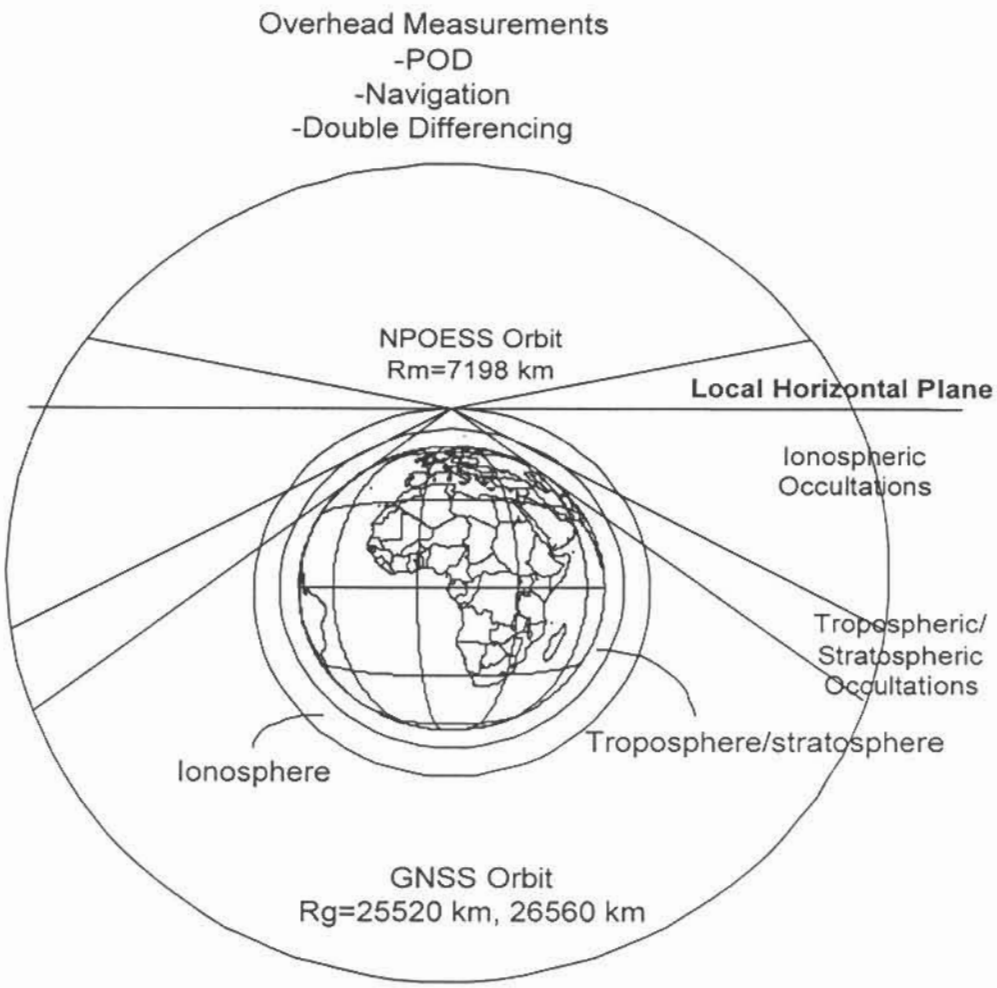

Occultation Geometry

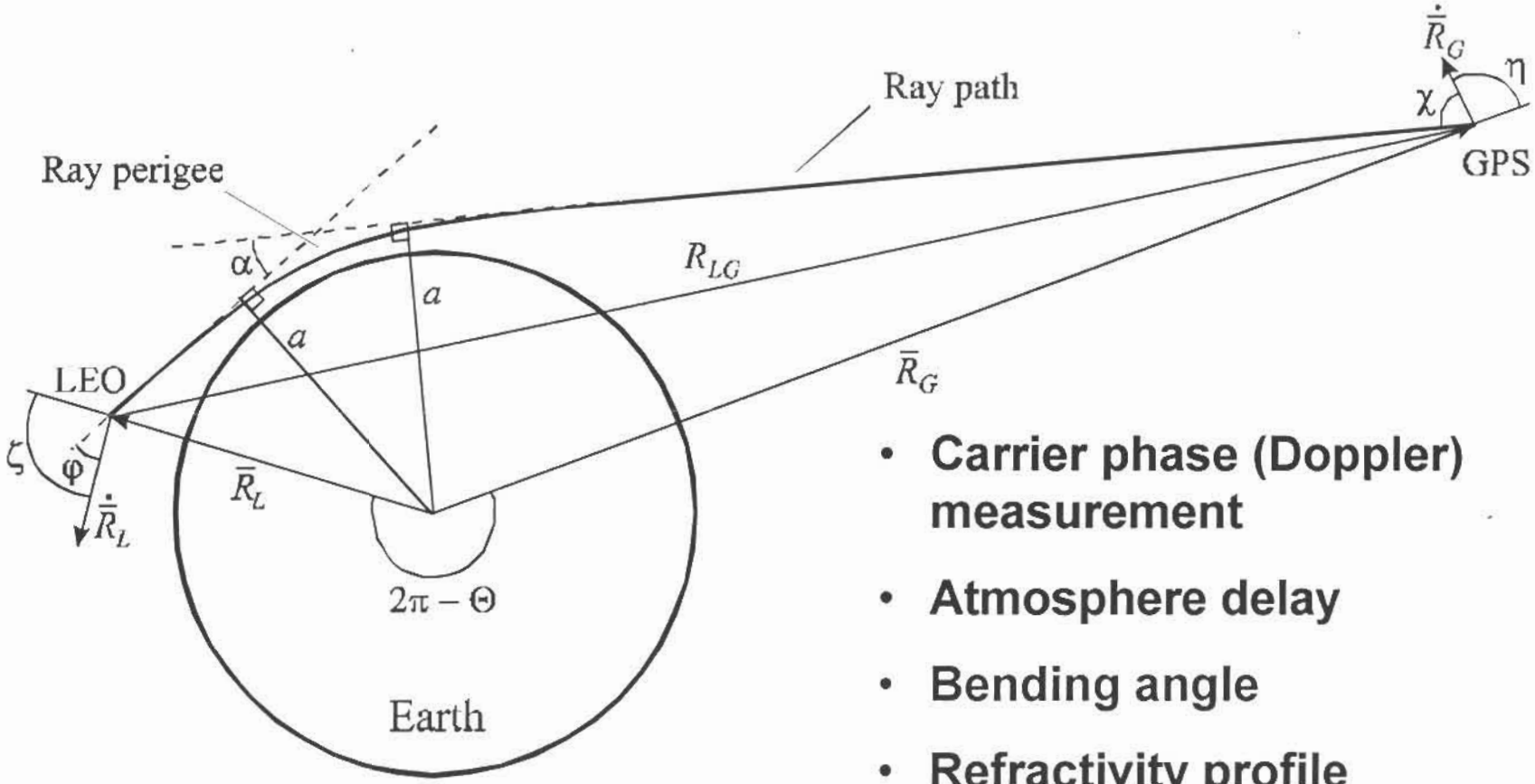

- Carrier phase (Doppler) measurement
- Atmosphere delay
- Bending angle
- Refractivity profile
- Temperature profile

PROGRAMMES

	EUROPE	US
Customer	EUMETSAT	IPO (NOAA, NASA, DOD)
Platform	METOP	NPOESS
1:st Launch	2003	2008
No of sat	3	5
Instrument	GRAS	GPSOS
Status	BB-Phase - 98	Risk Reduction Phase - 98
	C/D Phase running	EM Phase running
Service	Experiment	Operational

Occultation Instrument Objectives

- Deliver meteorological data to the scientific and meteorological communities
- Data: temperature, pressure and electron content vertical profiles of the atmosphere and ionosphere
- 500 - 1000 profiles per day and LEO S/C
- Measurements with very high accuracy and down to a few miles altitude
- Joint program between US and Europe

Instrument Accommodation

- Two occultation antennas
- Zenith antenna for navigation (Precise Orbit Determination)
- RF units placed close to antennas for best NF
- Can accommodate long IF cables to Electronics unit

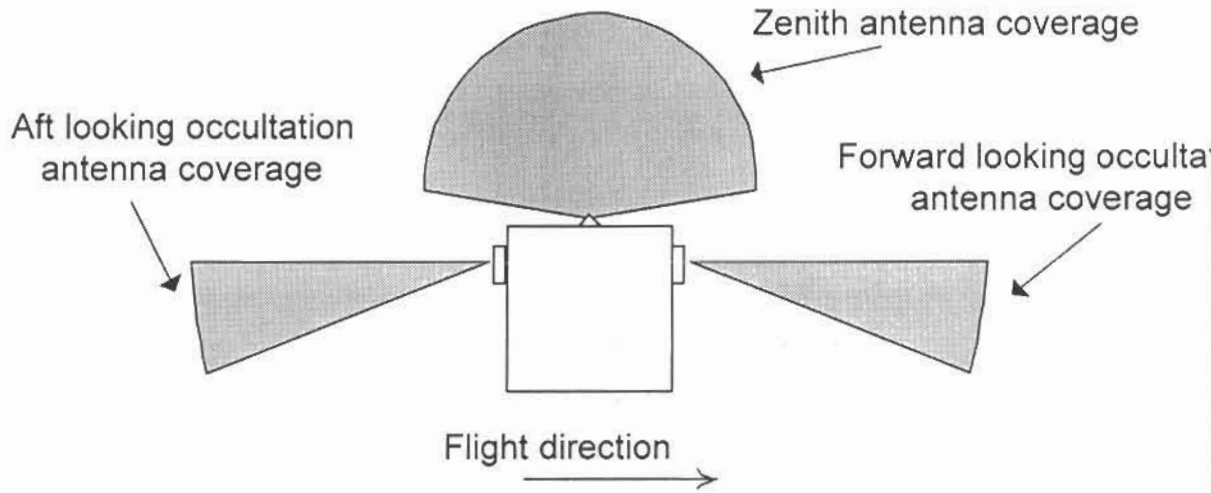

GPS System

	Coarse Acquisition C/A-code	Precision P-code	
CDMA pseudorandom	1.023	10.23	Msps
BW	±10.23	±10.23	MHz
Frequencies	L1=1575.42	L1=1575.42 L2=1227.6	MHz MHz
Availability	Public	Encrypted (Y-code)	
Measurement	Atmosphere	Atmosphere Ionosphere	
End product	Bending angle	Environmental Data Records	

Generic GPS Digital Receiver

- Digital down conversion
- Correlation with Early, Punctual and Late code
- Integration (despreading)
- Locked to Numerically Controlled Oscillator

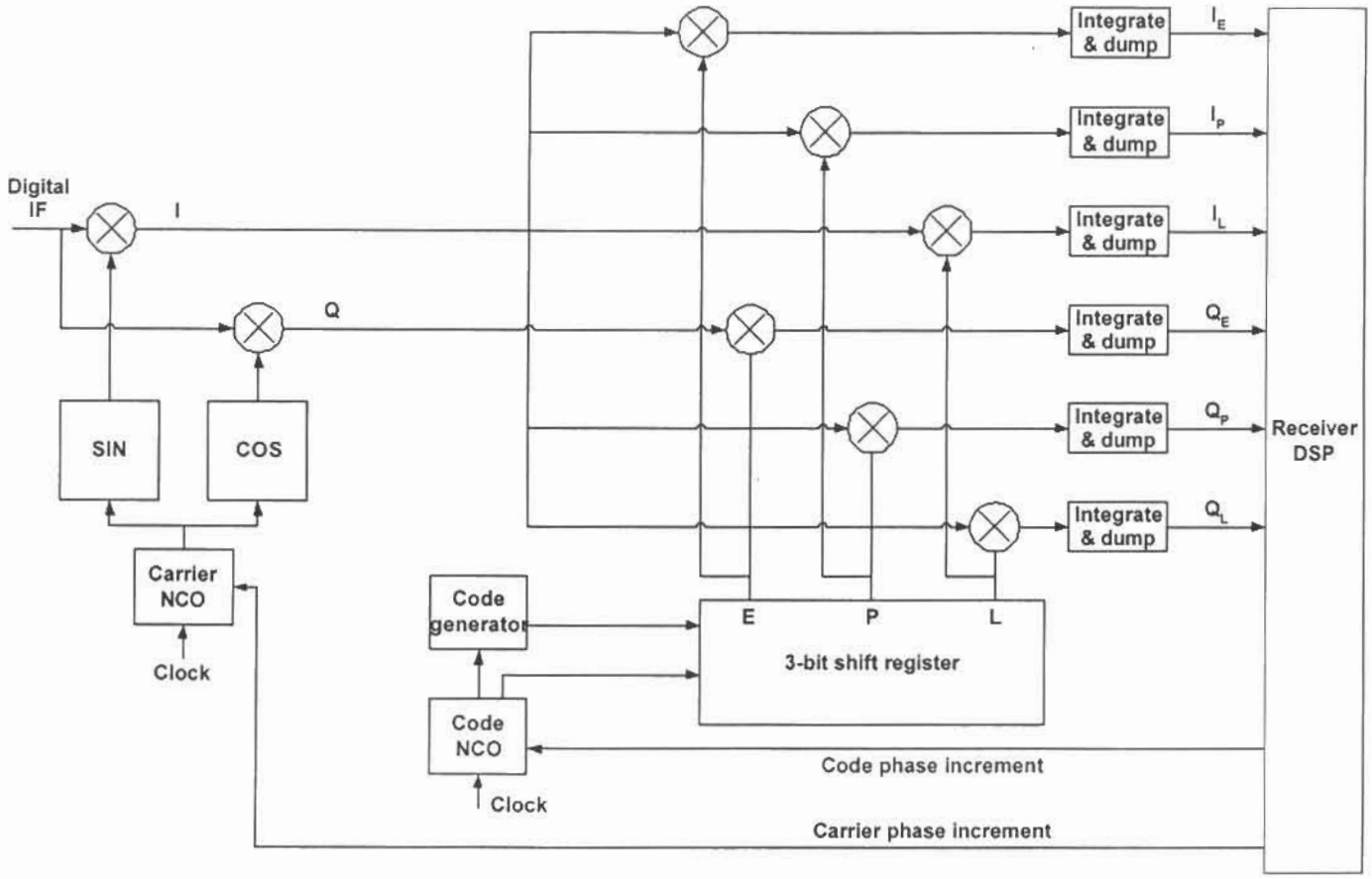

Instrument Functional Block Diagram

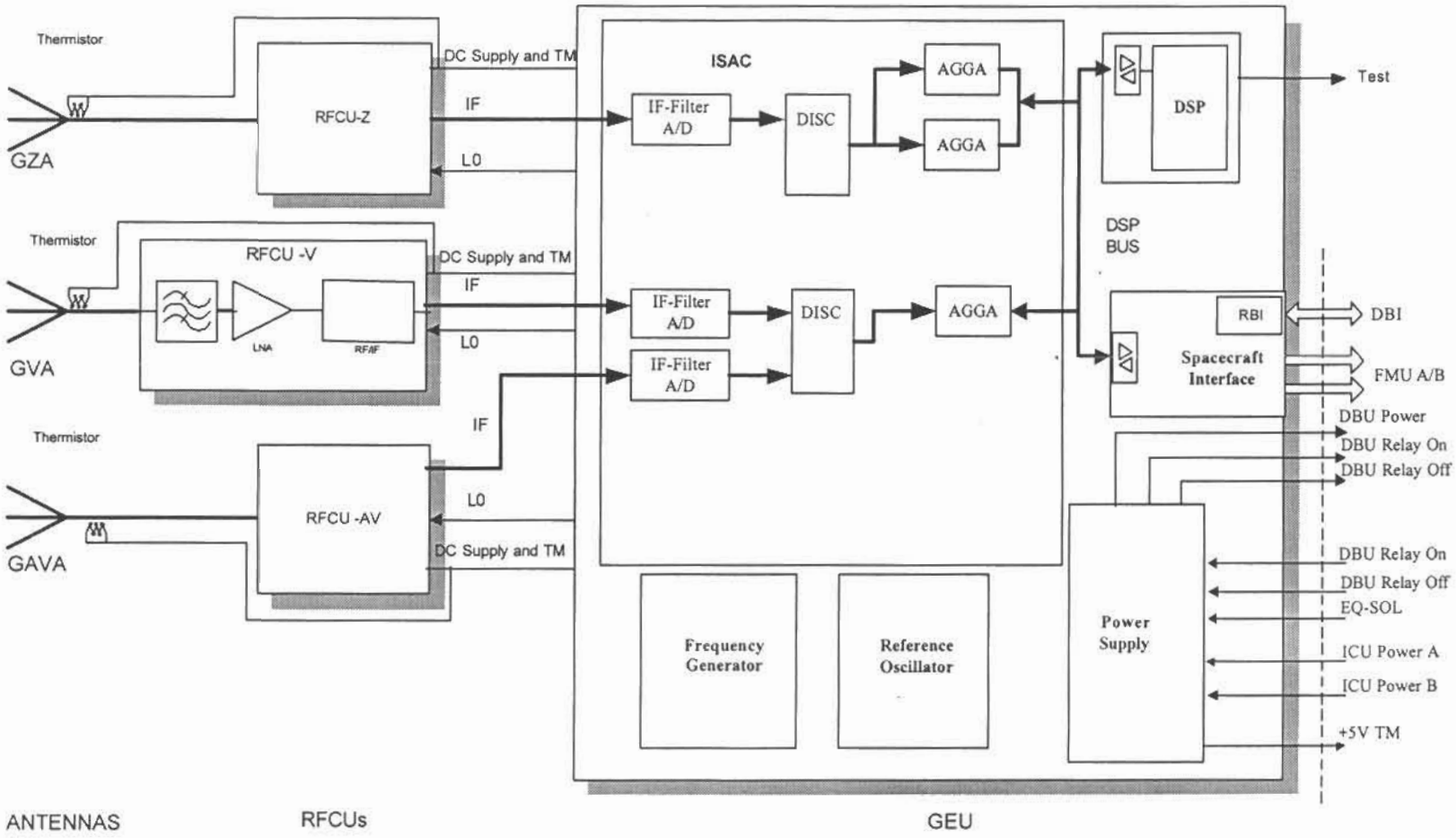

Occultation Antennas

- Dual frequency fixe beam array with resonant ring elements
- Individual feed networks in suspended QFRP microstrip
- Antenna pattern shaped to earth rim
- Coverage ±50° in azimuth (captures most of the GPS satellites)
- High antenna gain 11 dBi
- Suppressed interference and noise
- Low ohmic loss, low mass

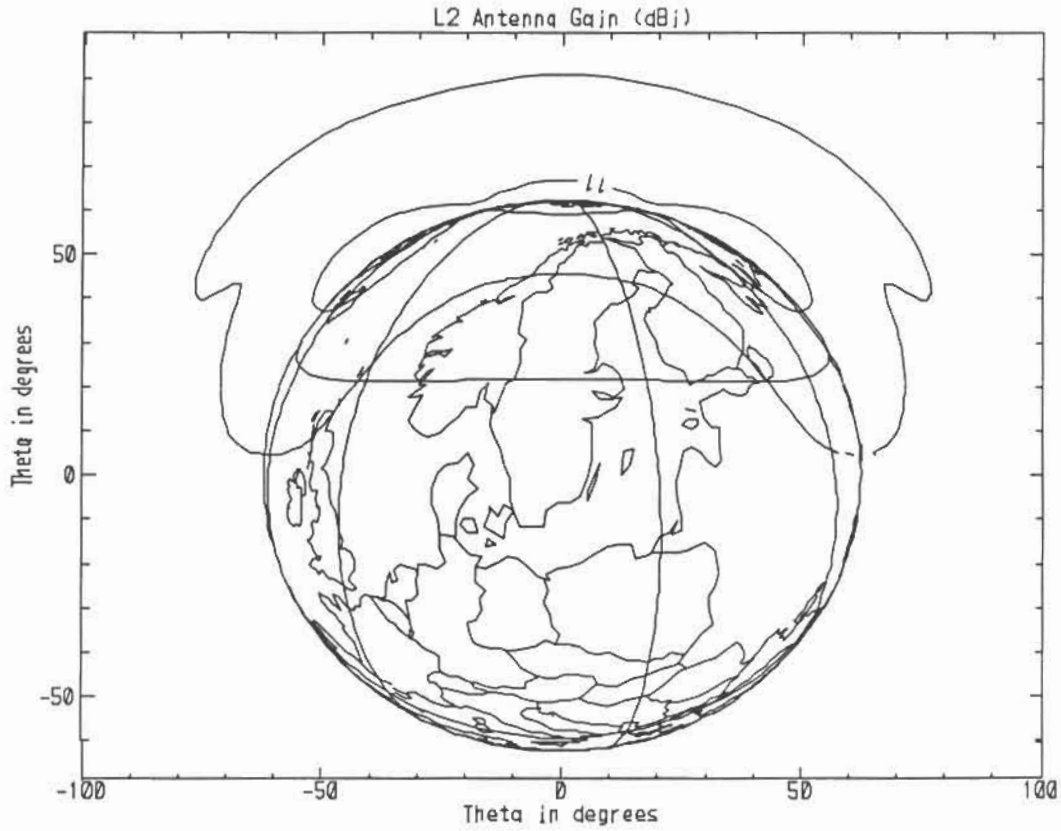

Occultation Antenna

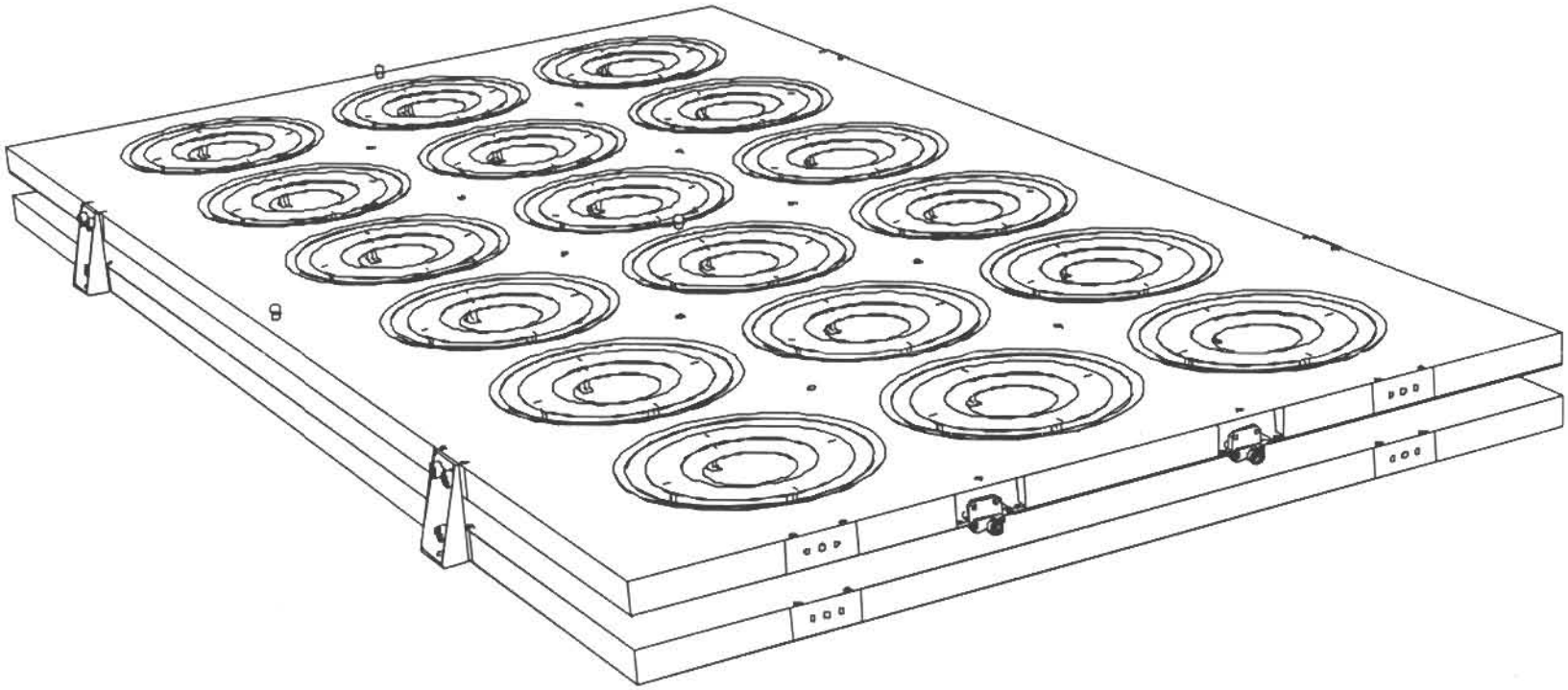

Radio Frequency Conditioner Unit

- Very highly selective RF and IF filters
- Single stage down conversion to IF
- Common LO frequency
- Recombination of L1/L2 at IF

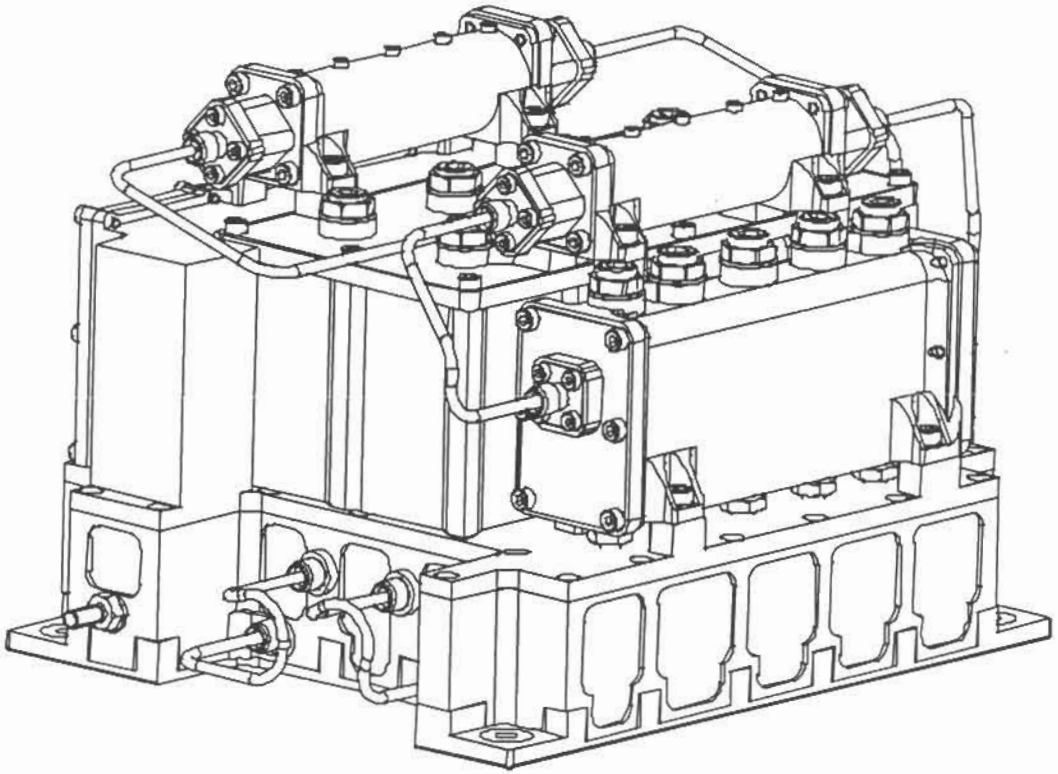

RFCU Functional Block Diagram

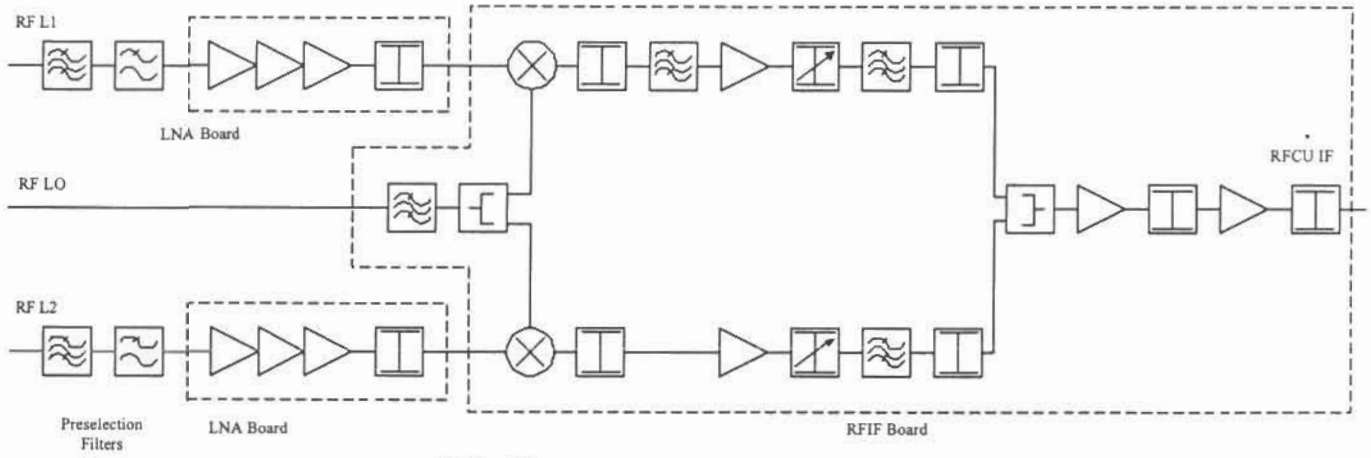

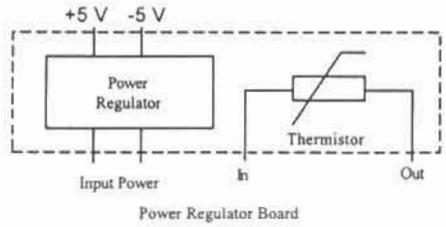

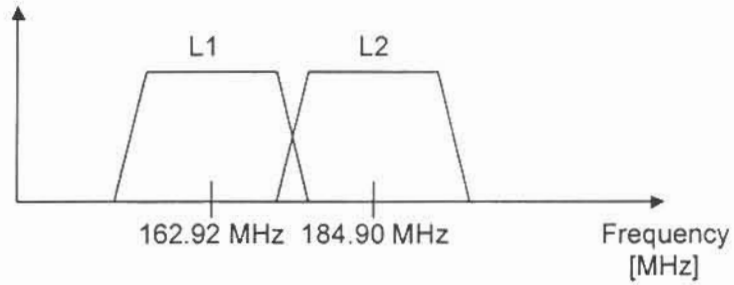

RFCU Key Features

- **Overall gain >85 dB**
- **Accommodates both GPS and GLONASS**
- **S&R transmitter located 20 MHz from L1 band edge - suppressed >95 dB**
- **LNA data:**
  - NF < 0.9 dB
  - RL > 20 dB
  - Gain > 38 dB

RFCU L1 Preselection Filter

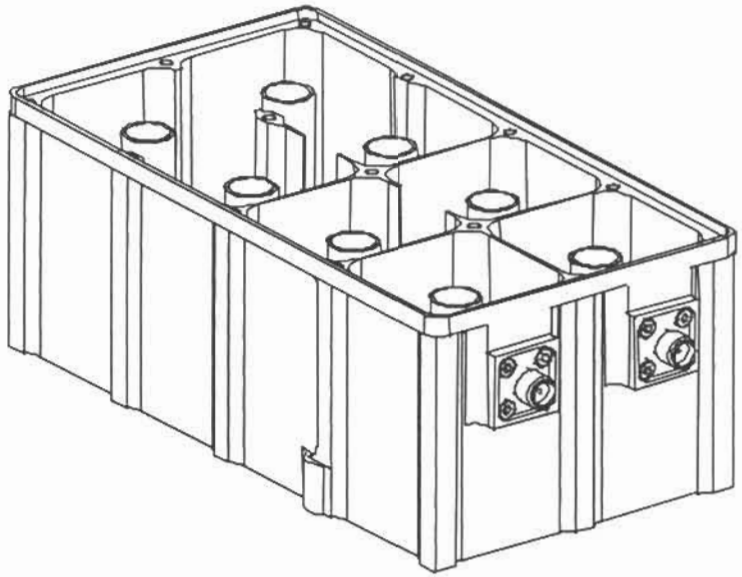

8-pole coaxial cavity filter

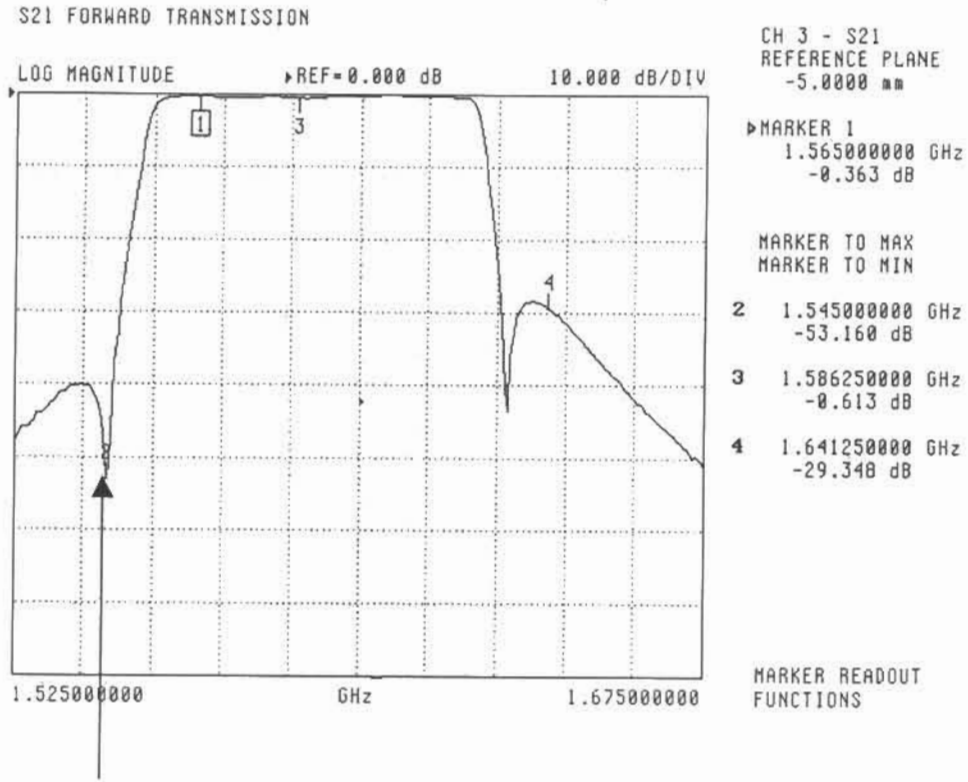

S&R transmitter suppressed 53 dB

GRAS Electronic Unit

1 Power converter

2 S/C interface

3 IF, Sampler and channel processor

4 DSP

5 Spare

6 Frequency generator

not shown: USO (Ultra Stable Oscillator)

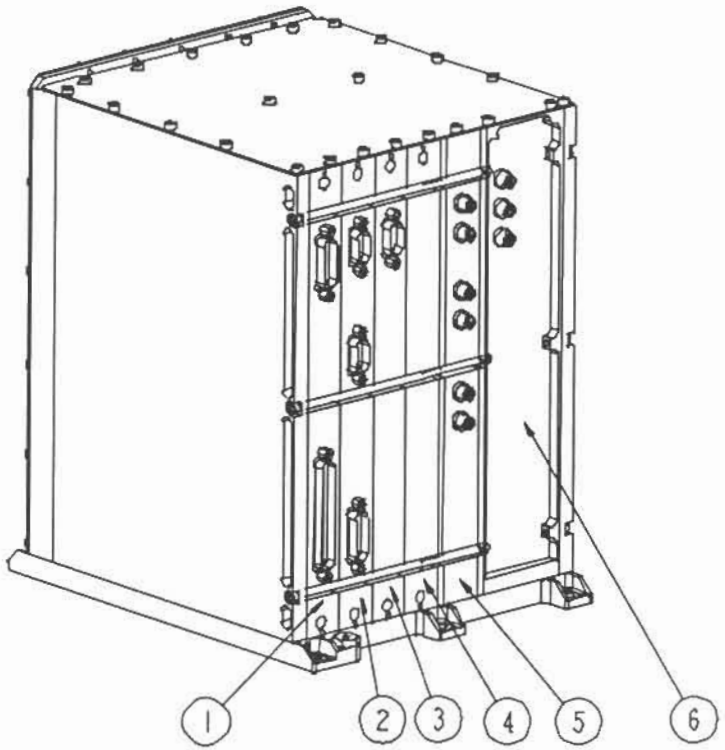

AGGA

- Advanced GPS GLONASS ASIC
- A custom designed ASIC for space applications developed under ESA contract
- Supports C/A, P and Y(semi) code tracking
- Twelve channels
- Application:
  - S/C control; Position, Velocity, Time and Attitude
  - Support to Precise Orbit Determination, POD
  - Atmospheric sounding
  - Reference stations

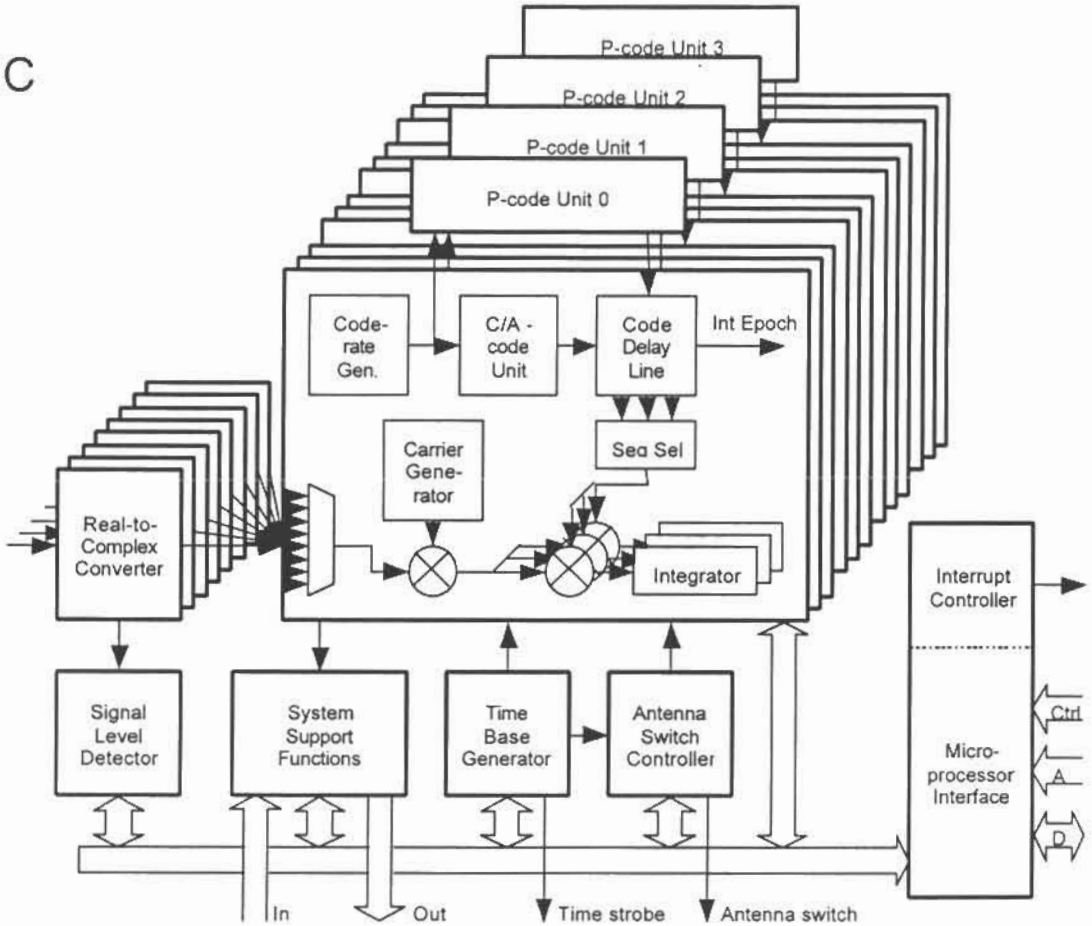

Instrument Summary

High S/N, low implementation losses	⇒	Measurements at low altitudes
Wide antenna coverage many channels	⇒	Covers a large no of occultation
Ultra stable oscillator	⇒	High measurement accuracy
RFC tolerant design Distributed front ends	⇒	Easy to accommodate
Modular design	⇒	Allows redundancy and expansion
GLONASS capability	⇒	Prepared for GNSS-2

Acknowledgements

- **IPO under which the GPSOS study has been conducted**
- **ESA under which the GRAS study has been conducted**

- **Reference:**
  - P Sinander, P Silvestrin, Development of an Advanced GPS GLONASS ASIC, ESTEC, ESA